Introduction

The information contained in this Troubleshooting Guide has been compiled from various sources within the marine industry. Any reference to a specific product or brand is not intended for commercial purposes. References to test equipment and products are based upon the information available to the staff of CDI Electronics. **This information is designed for use as a reference guide by a professional marine technician.** CDI Electronics cannot be held liable for the misuse or abuse of the information contained herein. The staff tries to make the information as accurate as possible. However, CDI Electronics cannot assume responsibility for either the data accuracy or the consequences of the data's application.

Safety Issues

Always remember to treat the outboard engine with respect. The engine uses high voltage for ignition and contains several moving components. Always be aware of moving mechanical parts, the surrounding area, and the position of your hands and body near the engine.

- **Never touch electrical components with wet hands.**
- **Whenever the power source is not needed, disconnect the cable from the negative terminal.**
- **Never reverse the battery leads when you connect the battery or disconnect the terminals while the engine is running.**
- **Never touch high-tension leads (spark plug leads) with any ungrounded tools while the engine is running.**
- **Never install equipment with requirements exceeding the generating power of the engine. Reference the service manual for values.**
- **Attempt to protect the electronic components from water.**
- **Insure fuel lines, harnesses, and oil lines are properly routed. Failure to follow this rule could result in a fire hazard.**
- **Make sure all ground leads are clean and tight.**

Recommended Marine Shop Electrical Test Equipment and Tools

The following is a listing of tools available from CDI Electronics and recommended for testing late model engines:

Part Number	Description	Remarks/Use
511-9764	Neon Spark Tester	Sealed single cylinder has removable ground clamp can be used for running tests
511-9766	Sealed Spark Gap Tester	Allows for testing up to 8 cylinder for cranking tests. Sealed design reduces the chance of engine fire.
511-9770	Piercing Probes	Allows access to wires for testing without removing the connection. Tiny hole usually reseals itself.
511-9773 .	DVA (Peak Voltage)Adapter	Unit automatically compensates for polarity. Can be used with most quality Multimeters
511-9775	Load Resistor	Used to load the output of ignition modules when testing ignition coils.
518-33A	CDI 33 Meter Includes 511-9773 DVA Adapter	Meter has voltage, amperage, diode check and ohms DVA Adapter allows meter to read peak voltage
518-80TK	Fluke Temperature Adapter	Works with most digital Multimeters capable of reading millivolts.
520-ST80	DC Inductive Timing Light	DC Powered timing light with a very bright strobe light.
551-33GF	Gearcase Filler w/Check Valve	Universal design makes filling lower units easier. Check valve assembly helps prevent oil spills and makes filling easier.
551-34PV	Pressure/Vacuum Tester	Repairable metal combination unit does both vacuum and pressure testing.
551-5110	Flywheel Holder	Longer handle helps during use.
551-9765	Spark Plug Wire Puller	Grounded design reduces the chances of shocking.
553-2700	Amphenol Pin Tool Set	Set contains 1 each of 553-2697 (Insertion), 553-2698 (Pin Removal) and 553-2699 (Socket Removal)
553-9702	Sensor Gap Gauge Tool	Used to set the timer-base air gap on 1973-1978 OMC 3 and 4 cylinder engines with screw terminal power packs.
554-9706	Amp Pin Removal Tool	Used to remove the connector pins in the ignition system on Chrysler/Force engines using the Prestolite type ignitions. Also used on the Mercury TPI sensor connectors.
911-9783	Bullet Connector Kit	Contains 10 pieces each of the male, female and sleeves.
912-9708	Marine Terminal Kit	Contains 100+ pieces of hard to find terminals and heat shrink.
991-9705	Dielectric Grease	Use to keep water and corrosion out of connectors.
511-6996	Remote Starter For OMC	Used to replace the boat-side harness for engine testing, Fits most OMC engines 1969 to 2000.
511-7900	Remote Starter for Mercury	Used to replace the boat-side harness for engine testing, Fits most Mercury engines 1979 to 2000.
519-LB85	Load Bank	Used to load the battery when testing the battery charging output.

Optional Equipment

511-4017	OMC Optical Sensor Tester	Unique handheld tester that will efficiently test the optical ignition sensor.
511-0401	CDI 2 Cylinder Ignition Tester	New hand-held ignition tester generates high-voltage stator and low voltage trigger signals to test a variety of 2 cylinder ignition systems. Engine specific adapters are required. Includes 511-0402, 511-0403 and 511-0404 adapters.
520-ST84	Ferret Ultra Bright Timing Light	Ultra bright timing light is visible in bright sunlight. Also has a built-in tachometer for 2 and 4 stroke engines. This feature is a valuable diagnostic tool when troubleshooting ignition system problems.

Tricks to Testing with Minimal Test Equipment

All Engines

Please keep detailed records when you repair an engine. If an engine comes in with one cylinder not firing, mark which one on the work order/history.

Intermittent Firing: This problem can be very hard to isolate. A good inductive tachometer can be used to compare the RPM on all cylinders up through WOT (wide-open throttle). A significant difference in the RPM readings can help pinpoint a problem quickly.

Visually Check the Stator, Trigger, Rectifier/Regulator and Flywheel: Cracks, burned areas and bubbles in or on the components indicate a problem. If the battery charge windings on the stator are dark brown, black or burned on most or all of the posts, the rectifier/regulator is likely shorted as well. Any sign of rubbing on the outside of the stator indicates a problem in the upper or lower main bearings. A cracked trigger or outer charging magnets can cause many problems ranging from misfiring to no fire at all. Loose flywheel magnets can be dangerous, check the tightness of the bonding adhesive.

Rectifier/Regulators can cause problems ranging from a high-speed miss to a total shutdown. An easy check is to disconnect the stator leads to the rectifier (Make sure to insulate them) and retest. If the problem is gone – replace the rectifier/regulator.

Johnson/Evinrude

Open Timer Bases: When all cylinders fire with the spark plugs out, but will not with them installed, try re-gapping the sensors using P/N: 553-9702 Gap Gauge. (See the section on OMC ADI Ignitions page 22-24).

Engines with S.L.O.W. Features: If the customer is complaining that the engine won't rev up and shakes real bad, the S.L.O.W. function could be activating. If the engine is NOT overheating, a temperature sensor or VRO sensor failing early can cause this problem. Disconnect the TAN wires *at the power pack* and retest. If the engine performs normally, reconnect the tan wires one at a time until the problem recurs, then replace the last sensor you connected. Make sure that all of the TAN wires are located as far as possible from the spark plug wires. Also check the blocking diode in the engine harness.

Mercury 6 Cylinder Engines with ADI Ignitions

If more than one cylinder is not firing: Replace BOTH switch boxes unless you can pin the problem down to the trigger. Replacing just one switch box can result in damage to the engine if the remaining switch box on the engine has a problem in the bias circuit.

Always check the bias circuit: Disconnect the White/Black jumper between the switch boxes and check the resistance from the White/Black terminal on each switch box to engine ground. You should read 12-15,000 ohms on stock switch boxes, and 9,000-9,800 ohms on racing switch boxes. MAKE SURE THE READING IS THE SAME ON BOTH SWITCH BOXES! Any problem with the bias circuit and BOTH switch boxes must be replaced as a set.

No Fire on 1, 3, 5 or 2, 4, 6: Swap the stator leads from one switch box to the other. If the problem moves, replace the stator. If the problem remains on the same cylinders, replace the switch box. If the stator is replaced and the problem is still present, try another flywheel.

No Fire on One Cylinder: This can be caused by a defective blocking diode in the other switch box. Disconnect the White/Black jumper between the switch boxes and retest. If all cylinders are now firing, replace the switch box that was originally firing all three cylinders. To verify this condition, swap the trigger leads on the switch box that was originally firing all three cylinders. If the misfire moves to another cylinder, the switch box is bad.

Voltage Drop Measurement

Start by using a good digital auto-ranging voltmeter capable of reading 1/10th of a volt. The use of an auto-ranging meter will allow for more accurate testing without damaging the meter due to an incorrect range setting.

Remove the spark plug wires form the spark plugs and connect them to a spark gap tester and remove the emergency stop clip as well. This prevents the engine from starting and also reduces the chance of getting shocked by the ignition system.

The use of an ohmmeter to test a conductor or switch contact for their condition is not the best tool to use. In most cases, it is preferable to use a volt drop test to make sure the conductor, as well as the connection, is in good condition.

Before testing, remove and clean all battery cables and connection points.

Testing the Positive Battery Cable to the Engine

1. Select the DC Volts position on the meter.
2. Connect the Red (Positive) lead on the meter to the positive battery *POST*.
3. Connect the Black (Negative) lead on the meter to the starter solenoid terminal where the positive battery cable is connected.
4. Using a remote start switch, activate the starter solenoid to spin the engine and observe the reading on the meter. A reading above 0.6V indicates a bad cable or bad connection.
   (a) If the meter reads above 0.6V, move the Black lead on the meter to the positive battery cable terminal on the starter solenoid and retest. If the reading drops to below 0.6V, the cable connection is bad.
   (b) If the meter still reads above 0.6V, move the Black lead on the meter to the positive battery cable terminal on the battery and retest. If the reading drops to below 0.6V, the cable is bad or undersized.

Service Note: A bad power connection to the ignition or battery charging system can be found by connecting the Black lead on the meter to the power connection of the ignition system or charging system; then working your way back to the battery positive post. At no time should you see a reading above 1V.

Testing the Negative Battery Cable to the Engine

1. Select the DC Volts position on the meter.
2. Connect the Black (Negative) lead on the meter to the negative battery *POST*.
3. Connect the Red (Positive) lead on the meter to the engine block where the negative battery cable is connected.
4. Using a remote start switch, activate the starter solenoid to spin the engine and observe the reading on the meter. A reading above 0.6V is an indicator of a bad cable or bad connection.
   (a) If the meter reads above 0.6V, move the Red lead on the meter to the negative battery cable terminal on the engine block and retest. If the reading drops to below 0.6V, the cable connection is bad.
   (b) If the meter still reads above 0.6V, move the Red lead on the meter to the negative battery cable terminal on the battery and retest. If the reading drops to below 0.6V, the cable is bad or undersized.

A bad ground connection to the ignition and battery charging system can be found by connecting the Red lead on the meter to the ground connection of the ignition or battery charging system; then working your way back to the battery negative post. At no time should you see a reading above 1V.

Johnson/Evinrude Model to Year Identification for 1980 and newer Engines

"INTRODUCES"

I	**N**	**T**	**R**	**O**	**D**	**U**	**C**	**E**	**S**
1	**2**	**3**	**4**	**5**	**6**	**7**	**8**	**9**	**0**

Example: J150TTL<u>CE</u> would be a 1989 150 HP Johnson and aE175ST<u>EU</u> would be a 1997 175 HP Evinruide.

Engine Wiring Cross Reference Chart for Most Outboards

Circuit	Mercury PRE- 1978	Mercury 1978 & UP	OMC	Yamaha	Force PRE- 1994	Force 1994 & UP	Suzuki
Power	Red	Red	Red	Red	Red	Red/Purple	White
Ign Switch	White	Purple	Purple	Yellow	Blue	Red/Blue	Gray
Eng Gnd	Black	Black	Black	Black	Black	Black	Black
Kill Circuit	Orange Salmon White	Blk/Yellow	Blk/Yellow	White	White	Blk/Yellow	Green Red Blue
Eng Start	Yellow	Yellow/Red	Yellow/Red	Brown	Yellow	Yellow/Red	Brown Yellow/Red
Tach	Brown	Gray	Gray	Green	Purple	Gray	Yellow
Battery Charge	Yellow/Red	Yellow Yellow/Blk	Yellow Yellow/Gry	Green	Yellow	Yellow Yellow/Blk	Yellow/Red
Stator CDI Power	Red White Blue(a)	Blue Blue/White Red Red/White Green/Wht Wht/Green	Brown Brown/Yel Brown/Blk Brown/Wht	Blue Brown Red Blk/Red	Blue Yellow Brown/Blue Brown/Yel	Blue Blue/White Red Red/White Green/Wht Wht/Green	Green Black/Red
Choke	Gray Blue	Yellow/Blk	Purple/Wht	Blue	Green	Yellow/Blk	Orange
Overheat Eng Temp	Tan	Tan	Tan (b) White/Blk(c)	Pink	Orange	Tan	Green/Yel

(a) Ignition Driver systems only, all others were battery driven systems.
(b) The stripe color on the Tan wire indicates the temperature at which the sensor trips.
(c) The White/Black wire is the cold engine temp indicator and shorts to Gnd at approx 105 deg F.

Blk = Black Wht = White Gry = Gray
Yel = Yellow Blk = Black

ABYC Recommended Boat Wiring Color Codes		
Color	**Function**	**Comments**
Yellow/Red Stripe (YR)	Engine Start Circuit	
Brown/Yellow Stripe (BY)	Bilge Blower	Alternate color is Yellow (Y)
Yellow Stripe (Y)	Bilge Blower	If used for DC negative, blower MUST be Brown/Yellow Stripe.
Dark Gray (Gy)	Navigation Lights	Fuse or Switch to lights
Dark Gray (Gy)	Tachometer	
Brown (Br)	Generator/Alternator	Charge Indicator Lights, Fuse or switch to pumps.
Orange (O)	Accessory Power	Ammeter to alternator output and accessory fuse or switches. Distribution Panel accessory switch.
Purple (Pu)	Ignition Instrument power	Ignition switch to coil and electrical instruments , Distribution Panel to electric instruments.
Dark Blue	Cabin and instrument lights	Fuse or switch to lights.
Light Blue (Lt Bl)	Oil Pressure	Oil sender to gauge.
Tan	Water Pressure	Temperature sender to gauge.
Pink (Pk)	Fuel Gauge	Fuel sender to gauge.
Green/White Stripe	Tilt/Trim down or in	Tilt and Trim circuits
Blue/White Stripe	Tilt/Trim up or out	Tilt and Trim circuits

Johnson/Evinrude Troubleshooting

Battery CD Ignitions with Points

DUE TO THE CONSTRUCTION OF THE BATTERIES, NEITHER MAINTAINENCE FREE NOR LOW MAINTAINENCE BATTERIES ARE NOT RECOMMENDED FOR THIS APPLICATION!

1. Clean all battery connections and engine grounds.
2. Check wiring as follows:

Pack Wire Color	Function
Red or Purple	12V from key-switch
Blue	Positive to ignition coil
Black/White	To points
Black	Engine Ground

Engine Wiring Connections for Testing Ignition Module

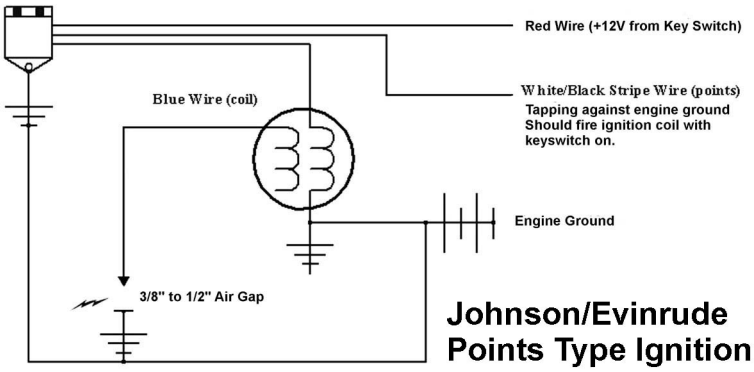

3. Connect a spark gap tester to the high tension lead coming from the ignition coil and set it to approximately ½". When you crank the engine over, if it sparks while the spark gap tester is connected to the coil and does not spark through the spark plug wires – there is a problem in the distributor cap, rotor button or spark plug wires.
4. Check voltage present on the purple wire at cranking. It MUST be at least 9½ volts. If not, there is a problem in the harness, key switch, starter or battery.
5. Check DVA voltage on the blue wire going to the coil, it should be approximately 200 volts at cranking.
6. Disconnect the white/black points wire. Turn the ignition switch on and strike the white/black points wire against engine ground. The unit should spark each time. If it does, this usually means the CD module is good. Check the points, points plate and grounding wire for the points.
7. Connect a spark gap tester to the high-tension leads coming from the distributor cap and set the gap to approximately 7/16". Align the rotor with #1 spark plug wire. Turn the ignition switch on and strike the white/black points wire against engine ground. Only the #1 spark plug wire should spark. If another spark plug wire has spark, there is a problem in the distributor cap. Repeat the test for the other cylinders.
8. Check the battery voltage at approximately 3500-RPM, MAXIMUM reading allowable is 16 volts. Over 16 volts will damage the ignition. Check for loose connections or a bad battery.

Johnson/Evinrude

Prestolite Battery Ignitions with Pickup Sensors

DUE TO THE CONSTRUCTION OF THE BATTERIES, NEITHER MAINTAINENCE FREE NOR LOW MAINTAINENCE BATTERIES ARE NOT RECOMMENDED FOR THIS APPLICATION!

1. Clean all battery connections and engine grounds.
2. Check wiring as follows:

Except 1967		**1967**	
Pack Wire Color	Function	Pack Wire Color	Function
Red or Purple	12V from keyswitch	Red or Purple	12V from keyswitch
Blue	Positive to ignition coil	Green	Positive to ignition coil
Black/White (2)	To trigger sensor	Blue (2)	To trigger sensor
Black	Engine Ground	Black	Engine Ground
Green/Black*	Anti-reverse Spring	Green/Black*	Anti-reverse Spring

* Some engines had this wire on the sensor plate.

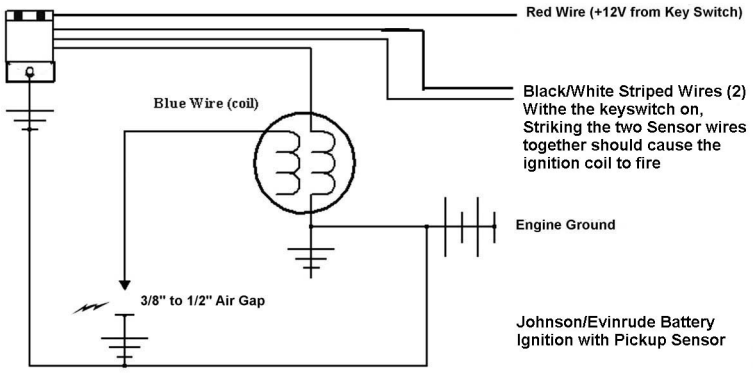

3. Connect a spark gap tester to the high tension lead coming from the ignition coil and set it to approximately ½". When you crank the engine over, if it sparks while the spark gap tester is connected to the coil and does not spark through the spark plug wires – there is a problem in the distributor cap, rotor button or spark plug wires.
4. Check voltage present on the Purple (or Red) wire at cranking. It MUST be at least 9½ volts. If not, there is a problem in the harness, key switch, starter or battery.
5. Check DVA voltage on the Blue (or Green) wire going to the coil, it should be approximately 200 volts at cranking.
6. Disconnect the sensor wires. Turn the ignition switch on and strike the sensor wires together. The unit should fire each time. If it does, this usually means the CD module is good. Check the sensor and sensor air gap.
7. Make sure the triggering ring is the correct one for the type ignition being used. Phase II ignitions require the sensor with wide gaps between the lobes.

Phase One Rotor

Phase Two Rotor

8. Reset the sensor air gap to 0.020 in. If this allows the pack to fire, leave the gap at that setting.
9. Connect a spark gap tester to the high-tension leads coming from the distributor cap and set the gap to approximately 7/16". Align the rotor with #1 spark plug wire. Turn the ignition switch on and strike the sensor's wires together. Only the #1 spark plug wire should fire. If any of the other spark plug wires have fire, there is a problem in the distributor cap. Repeat the test for the other cylinders.
10. Check the battery voltage at approximately 3500-RPM, MAXIMUM reading allowable is 16 volts. Over 16 volts will damage the ignition. Check for loose connections or a bad battery.

Johnson/Evinrude Troubleshooting

Alternator Driven CD Ignitions 1972-1978

(With screw terminal type power packs)

Two Cylinder Engines

NO SPARK ON EITHER CYLINDER:

1. Disconnect the black yellow stop wire and retest. If the engine's ignition has spark, the stop circuit has a fault-check the key switch, harness and shift switch.
2. Check the stator resistance. You should read approximately 500 ohms from the brown wire to engine ground.
3. Check the DVA output from the stator. You should have a reading of at least 150V or more from the brown wire to engine ground (while connected to the pack).
4. Check the timer base's resistance from the black/white wire to the white/black wire. Reading should be 10-20 ohms (or 30-40 ohms for CDI Electronics 133-0875K1). Note: The original factory specifications was 8-14 ohms, this was changed around the mid 1970's in response to the change in SCR's triggering requirements.
5. Check the DVA output from the timer base. A reading of at least 0.5V or more from the black/white wire to the white/black (while connected to the pack) is needed to fire the pack. If the output is low, you may try to reset the air gap between the timer base sensor and the triggering magnet.
1. Loosen the two mounting screws on the sensor and the nut located in the epoxy on the outside of the heat shield of the timer base.
2. Slide the sensor in toward the crankshaft approximately 0.005" at a time.
3. Coat the face of the sensor with machinists bluing or equivalent.
4. Install the flywheel according to the service manual and crank the engine over.
5. Remove the flywheel and check to see if the trigging magnet struck the sensor face.
6. If the ignition fired, finger tight the nut on the outside of the heat shield and coat it with RTV.
7. If still no fire, slide the sensor in another 0.005" and repeat steps c through f.
6. Check the DVA voltage on each trigger wire to engine ground. You should have a reading of at least 150V or more from the black/white wire and the white/black wire to engine ground (while connected to the pack). If the reading is low, disconnect the trigger wires from the pack and recheck the terminals on the pack. If the voltage jumps up to an acceptable reading, the timer base may have a problem in it's internal wiring (A thin spot in the insulation on one wire).
7. Check the cranking RPM. A cranking speed of less than 250-RPM will not allow the system to spark properly.

NO SPARK ON ONE CYLINDER:

Either a faulty power pack or ignition coil normally causes this. Extremely rare causes include a weak trigger magnet in the flywheel or a timer base.

Three Cylinder Engines

NO SPARK ON ANY CYLINDER:

Note: If the ignition only sparks with the spark plugs out, the timer base is likely weak or the engine is not spinning fast enough. See # 6 and #8.

1. Disconnect the black yellow stop wire and retest. If the engine's ignition has spark, the stop circuit has a fault-check the key switch, harness and shift switch.
2. Disconnect the yellow wires from the rectifier and retest. If the engine now sparks, replace the rectifier.
3. Check the stator resistance. Reading should be about 500 ohms from the brown wire to brown/yellow wire.
4. Check the DVA output from the stator. You should have a reading of at least 150V or more from the brown wire to the brown/yellow wire (while connected to the pack).
5. Check the timer base's resistance from the black/white wire to the white/black wires. Reading should be 10-20 ohms (or 30-40 ohms for CDI Electronics Blue Timer Bases).
6. Check the DVA output from the timer base. A reading of at least 0.5V or more is needed from the black/white wire to the white/black wires (while connected to the pack) to fire the pack. If the output is low, you may try to reset the air gap between the timer base sensor and the triggering magnet using a Sensor Gap Gauge (553-9702) or use the following procedure outlined below.
   a) Loosen the two mounting screws on the sensors and the nuts located in the epoxy on the outside of the heat shield of the timer base and slide the sensors in toward the crankshaft until the sensor touches the stop boss located at the base of the sensor mounting area. Tighten the mounting screws.
   b) Coat the face of the sensor with machinists bluing or equivalent and install the flywheel without the key and rotate the flywheel at least one full turn. Remove the flywheel and check to see if the trigging magnet struck the sensor face. If it did, back the sensor out approximately 0.005" and repeat steps C, D and E.
   c) If the ignition has spark, finger tight the nut on the outside of the heat shield and coat it with RTV.
   d) If still no spark, replace the sensor.

Johnson/Evinrude Troubleshooting

Alternator Driven CD Ignitions 1972-1978

(Three Cylinder Engines with screw terminal type power packs, continued)

7. Check the DVA voltage on the black/white wire to engine ground. You should have a reading of at least 150V or more (while connected to the pack). If the reading is low, disconnect the trigger wires from the pack and recheck the black/white terminal on the pack. If the voltage jumps up to an acceptable reading, the timer base may have a problem in the internal wiring (A thin spot in the insulation on one wire).
8. Check the cranking RPM. A cranking speed of less than 250-RPM will not allow the system to fire properly.

NO SPARK OR INTERMITTENT ON ONE OR MORE CYLINDERS:

1. Check the timer base resistance from the black/white wire to the white/black wires. Reading should be 10-20 ohms (or 30-40 ohms for CDI Electronics Blue Timer Bases) .
2. Check the DVA output from the timer base. A reading of at least 0.5V or more is needed from the black/white wire to the white/black wires (while connected to the pack) to fire the pack.
3. Check the DVA output on the orange wires from the power pack while connected to the ignition coils. You should have a reading of at least 150V or more. If the reading is low on one cylinder, disconnect the orange wire from the ignition coil for that cylinder and reconnect it to a load resistor. Retest. If the reading is good, the ignition coil is likely bad. A continued low reading indicates a bad power pack.

Four Cylinder Engines

NO SPARK ON ANY CYLINDER:

(Note: If the engine has spark with the spark plugs out but not with them installed, the timer base is either weak or the engine is not spinning fast enough. See # 6 and #8.)

1. Disconnect the black yellow stop wire and retest. If the engines' ignition now has spark, the stop circuit has a fault-possibly the key switch, harness or shift switch.
2. Disconnect the yellow wires from the rectifier and retest. If the engine has spark, replace the rectifier.
3. Check the stator resistance. You should read about 500 ohms from the brown wire to the brown/yellow wire.
4. Check the DVA output from the stator. You should have a reading of at least 150V or more from the brown wire to the brown/yellow wire (while connected to the pack).
5. Check the timer base resistance from the #1 to the #3 sensor wire, and from the #2 to the #4 sensor wire. Reading should be 10-20 ohms on each set (or 30-40 ohms for CDI Electronics Blue Timer Bases).
6. Check the DVA output from the timer base. A reading of at least 0.5V or more from the #1 sensor wire to the #3 sensor wire, and from the #2 sensor wire to the #4 sensor wire (while connected to the pack) is needed to fire the pack. If the output is low, you may try to reset the air gap between the timer base sensor and the triggering magnet using a Sensor Gap Gauge (553-9702) or use the following procedure:
   a) Loosen the two mounting screws on the sensors and the nuts located in the epoxy on the outside of the heat shield of the timer base.
   b) Slide the sensors in toward the crankshaft until the sensor touches the stop boss located at the base of the sensor mounting area. Tighten the mounting screws.
   c) Coat the face of the sensors with machinists bluing or equivalent.
   d) Install the flywheel without the key and rotate the flywheel at least one full turn.
   e) Remove the flywheel and check to see if the trigging magnet struck the face of the sensors. If it did, back the sensor out approximately 0.005” and repeat steps c, d and e.
   f) If the ignition fired, finger tight the nuts on the outside of the heat shield and coat them with RTV.
   g) If still no fire, replace the sensor.
7. Check the DVA voltage on each black/white wire to engine ground. You should have a reading of at least 150V or more (while connected to the pack). If the reading is low, disconnect the trigger wires from the pack and recheck the black/white terminals on the pack. If the voltage jumps up to an acceptable reading, the timer base may have a problem in the internal wiring (possibly a thin spot in the insulation on one wire).
8. Check the cranking RPM. A cranking speed of less than 250-RPM will not allow the system to fire properly.

Johnson/Evinrude Troubleshooting

Alternator Driven CD Ignitions 1972-1978

Four Cylinder Engines with screw terminal type power packs (Continued)

NO SPARK OR INTERMITTENT ON ONE OR MORE CYLINDERS:

Check the DVA output on the orange wires from the power pack while connected to the ignition coils. You should have a reading of at least 150V or more. If the reading is low on one cylinder, disconnect the orange wire from the ignition coil for that cylinder and reconnect it to a load resistor. Retest. If the reading is good, the ignition coil is likely bad. A continued low reading indicates a bad power pack.

NO SPARK OR INTERMITTENT ON ONE BANK:

1. Check the timer base's resistance from the #1 to the #3 sensor wire, and from the #2 to the #4 sensor wire. Reading should be 10-20 ohms on each set (or 30-40 ohms for CDI Electronics Blue Timer Bases).
2. Check the DVA output from the timer base. A reading of at least 0.5V or more from the #1 to the #3 sensor wire, and from the #2 to the #4 sensor wire (while connected to the pack) is needed to have spark. If the output is low, you may try to reset the air gap between the timer base sensor and the triggering magnet using a sensor gap gauge or use the procedure outlined in the previous page.
3. Check the DVA output on the orange wires from the power pack while connected to the ignition coils. You should have a reading of at least 150V or more. If the reading is low on one cylinder, disconnect the orange wire from the ignition coil for that cylinder and connect a load resistor to that terminal. Retest. If the reading is now good, the ignition coil is likely bad. A continued low reading indicates a bad power pack.

Six Cylinder Engines

Note: If the engine has spark with the spark plugs out but not with them installed, the timer base is likely weak or the engine is not spinning fast enough. See # 6 and #8.

NO SPARK ON ANY CYLINDER:

1. Disconnect the black/yellow stop wire and retest. If the engine's ignition has spark, the stop circuit has a fault, check the key switch, harness and shift switch.
2. Disconnect the yellow wires from the rectifier and retest. If the engine has spark, replace the rectifier.
3. Check the stator resistance. You should read about 500 ohms from the brown wire to the brown/yellow wire.
4. Check the DVA output from the stator. You should have a reading of at least 150V or more from the brown wire to the brown/yellow wire (while connected to the pack) on each bank.
5. Check the timer base's resistance from the white wire to the blue, green and purple wires. Reading should be 10-20 ohms (or 30-40 ohms for CDI Electronics Blue Timer Bases).
6. Check the DVA output from the timer base. A reading of at least 0.5V or more from the white wire to the blue, green and purple wires (while connected to the pack) is needed to fire the pack.
7. Check the DVA voltage on the white wire to engine ground. You should have a reading of at least 150V or more (while connected to the pack). If the reading is low, disconnect the trigger wires from the pack and recheck the white terminal on the pack. If the voltage jumps up to an acceptable reading, the timer base may have a problem in the internal wiring (possibly a thin spot in the insulation on one wire).
8. Check the cranking RPM. A cranking speed less than 250-RPM will not allow the system to fire properly.

NO SPARK OR INTERMITTENT ON ONE OR MORE CYLINDERS:

1. Check the timer bases resistance from the white wire to the blue, green and purple wires. Reading should be 10-20 ohms (or 30-40 ohms for CDI Electronics Blue Timer Bases).
2. Check the DVA output from the timer base. A reading of at least 0.5V or more from the white wire to the blue, green and purple wires (while connected to the pack) is needed to fire the pack.
3. Check the DVA output on the orange wires from the power pack while connected to the ignition coils. You should have a reading of at least 150V or more. If the reading is low on one cylinder, disconnect the orange wire from the ignition coil for that cylinder and reconnect it to a load resistor. Retest. If the reading is now good, the ignition coil is likely bad. A continued low reading indicates a bad power pack.

Johnson/Evinrude Troubleshooting

Alternator Driven CD Ignitions 1978-2006

Two Stroke/Except Direct Injected Engines

Two Cylinder Engines

NO SPARK ON ANY CYLINDER:

1. Disconnect the black/yellow stop wire and retest. If the engine's ignition has spark, the stop circuit has a fault-check the key switch, harness and shift switch.
2. Check the stator and trigger resistance and DVA output as given below:

Wire Color	Check to Wire Color	Resistance	DVA Reading
Brown wire	Brown/Yellow wire	450-550	150V or more Connected
Black/White wire	White/Black wire	15-42	0.6V or more Connected
Some engines use the following wiring on the trigger:			
White wire	Blue wire	15-42	0.6V or more Connected
White wire	Green wire	15-42	0.6V or more Connected

3. Check the cranking RPM. A cranking speed of less than 250-RPM will not allow the system to spark properly.
4. Check the DVA output on the orange wires from the power pack while connected to the ignition coils. You should have a reading of at least 150V or more. If the readings are low, disconnect the orange wires from the ignition coils and reconnect them to a load resistor. Retest. If the reading is now good, the ignition coil is likely bad. A continued low reading indicates a bad power pack.

NO SPARK ON ONE CYLINDER:

Either a faulty power pack or ignition coil normally causes this problem. Rare cases include a weak trigger magnet in the flywheel or a timer base.

WILL NOT ACCELERATE BEYOND 3000 RPM:

1. Check the DVA output on the orange wires from the power pack while connected to the ignition coils. You should have a reading of at least 150V or more, increasing with engine RPM until it reaches 300-400 volts. A sharp drop in voltage right before the miss becomes apparent will normally be caused by a bad stator. A drop on only one orange wire will normally be the power pack.
2. Check the stator resistance. If it reads approximately 900 ohms, replace it with the 500 ohm design.

Engines with S.L.O.W.

ENGINE WILL NOT ACCELERATE BEYOND 2500 RPM:

1. Use a temperature probe and verify that the engine is not overheating.
2. Disconnect the tan temperature wire from the pack and retest. If the engine now performs properly, replace the temperature switch.
3. Make sure the tan temperature switch wire is not located next to a spark plug wire.
4. Check the stator resistance. If it reads approximately 900 ohms, replace it with the 500 ohm design.

Three Cylinder Engines

(Except Quick Start Models)

NO SPARK ON ANY CYLINDER:

1. Disconnect the black/yellow stop wire and retest. If the engine's ignition has spark, the stop circuit has a fault-check the key switch, harness and shift switch.
2. Disconnect the yellow wires from the rectifier and retest. If the ignition now has spark, replace the rectifier.
3. Check the stator and trigger resistance and DVA output as given below:

Wire Color	Check to Wire Color	Resistance	DVA Reading
Brown wire	Brown/Yellow wire	450-550	150V or more Connected
White wire	Purple	38-42	0.6V or more Connected
White wire	Blue wire	38-42	0.6V or more Connected
White wire	Green wire	38-42	0.6V or more Connected

4. Check the cranking RPM. A cranking speed of less than 250-RPM will not allow the system to spark properly.

NO SPARK OR INTERMITTENT ON ONE OR MORE CYLINDERS:

1. Check the trigger resistance and DVA output as given below:

Wire Color	Check to Wire Color	Resistance	DVA Reading
White wire	Purple	38-42	0.6V or more Connected
White wire	Blue wire	38-42	0.6V or more Connected
White wire	Green wire	38-42	0.6V or more Connected

2. Check the DVA output on the orange wires from the power pack while connected to the ignition coils. You should have a reading of at least 150V or more. If the reading is low on one cylinder, disconnect the orange wire from the ignition coil for that cylinder and reconnect it to a load resistor. Retest. If the reading is now good, the ignition coil is likely bad. A continued low reading indicates a bad power pack.

Johnson/Evinrude Troubleshooting
Alternator Driven CD Ignitions 1978-2006
(Three Cylinder Engines Continued…)

Models with S.L.O.W.

ENGINE WILL NOT ACCELERATE BEYOND 2500 RPM:

1. Use a temperature probe and verify that the engine is not overheating.
2. Disconnect the tan temperature wire from the pack and retest. If the engine now performs properly, replace the temperature switch.
3. Make sure the tan temperature switch wire is not located next to a spark plug wire.

Three Cylinder Engines
(Quick Start Models)

NO SPARK ON ANY CYLINDER:

1. Disconnect the black/yellow stop wire and retest. If the engine's ignition has spark, the stop circuit has a fault-possibly the key switch, harness or shift switch.
2. Disconnect the yellow wires from the rectifier and retest. If the ignition now has spark, replace the rectifier.
3. Check the stator and trigger resistance and DVA output as given below:

Wire Color	Check to Wire Color	Resistance	DVA Reading
Brown wire	Brown/Yellow wire	450-550	150V or more Connected
Orange wire	Orange/Black wire	450-550**	150V or more Connected
White wire	Purple	1.1M-2.4M ^^	0.6V or more Connected
White wire	Blue wire	1.1M-2.4M ^^	0.6V or more Connected
White wire	Green wire	1.1M-2.4M ^^	0.6V or more Connected

** NOTE: Some engines use a 50 or a 100 ohms power coil.

^^ This reading will vary according to the meter used. Do a comparison reading and if there is a difference of over 10%, replace the timer base. Typically, use the Red meter lead to the White wire and the Black wire to the other wires.

4. Check the cranking RPM. A cranking speed of less than 250-RPM will not allow the system to spark properly.

NO SPARK ON ONE OR MORE CYLINDERS:

1. Check the stator and trigger resistance and DVA output as given below:

Wire Color	Check to Wire Color	Resistance	DVA Reading
Brown wire	Brown/Yellow wire	450-550	150V or more Connected
Orange wire	Orange/Black wire	450-550**	150V or more Connected
White wire	Purple	1.1M-2.4M ^^	0.6V or more Connected
White wire	Blue wire	1.1M-2.4M ^^	0.6V or more Connected
White wire	Green wire	1.1M-2.4M ^^	0.6V or more Connected

** NOTE: Some engines use a 50 or a 100 ohms power coil.

^^ This reading will vary according to the meter used. Do a comparison reading and if there is a difference of over 10%, replace the timer base. Typically, use the Red meter lead to the White wire and the Black wire to the other wires.

2. Check the DVA output on the orange wires from the power pack while connected to the ignition coils. You should have a reading of at least 150V or more. If the reading is low on one cylinder, disconnect the orange wire from the ignition coil for that cylinder and reconnect it to a load resistor. Retest. If the reading is now good, the ignition coil is likely bad. A continued low reading indicates a bad power pack.

ENGINE WILL NOT ACCELERATE BEYOND 2500 RPM:

1. Use a temperature probe and verify that the engine is not overheating.
2. Disconnect the tan temperature wire from the pack and retest. If the engine now performs properly, replace the temperature switch.
3. Make sure the tan temperature switch wire is not located next to a spark plug wire.

Johnson/Evinrude Troubleshooting

Alternator Driven CD Ignitions 1978-2006

Four Cylinder Engines (Except Quick Start Models)

NO SPARK ON ANY CYLINDER:

1. Disconnect the black/yellow stop wire and retest. If the engine's ignition has spark, the stop circuit has a fault- possibly the key switch, harness or shift switch.
2. Disconnect the yellow wires from the rectifier and retest. If the engine has spark, replace the rectifier.
3. Check the stator and trigger resistance and DVA output as given below for both banks:

Wire Color	Check to Wire Color	Resistance	DVA Reading
Brown wire	Brown/Yellow wire	450-550	150V or more Connected
White wire	Blue wire	38-42	0.6V or more Connected
White wire	Green wire	38-42	0.6V or more Connected

4. Check the cranking RPM. A cranking speed of less than 250-RPM will not allow the system to fire properly.
5. Check the center hub triggering magnet in the flywheel for damage and tight fit.

NO SPARK OR INTERMITTENT ON ONE CYLINDER OR ONE BANK:

1. Check the stator and trigger resistance and DVA output as given below for both banks:

Wire Color	Check to Wire Color	Resistance	DVA Reading
Brown wire	Brown/Yellow wire	450-550	150V or more Connected
White wire	Blue wire	38-42	0.6V or more Connected
White wire	Green wire	38-42	0.6V or more Connected

NOTE: Also check the DVA readings to engine ground from each brown wire and compare the readings. If one wire reads low while connected to the pack, swap the connections and see if the low reading stays on the same stator wire. If it does, the stator is bad.

2. Check the DVA output on the orange wires from the power pack while connected to the ignition coils. You should have a reading of at least 150V or more. If the reading is low on one cylinder, disconnect the orange wire from the ignition coil for that cylinder and reconnect it to a load resistor. Retest. If the reading is now good, the ignition coil is likely bad. A continued low reading indicates a bad power pack.

Johnson/Evinrude Troubleshooting

Alternator Driven CD Ignitions 1978-2006

Four Cylinder Engines (Quick Start Models)

NO SPARK ON ANY CYLINDER:

1. Disconnect the black/yellow stop wire and retest. If the engine's ignition has spark, the stop circuit has a fault- possibly the key switch, harness or shift switch.
2. Disconnect the yellow wires from the rectifier and retest. If the engine has spark, replace the rectifier.
3. Check the stator and trigger resistance and DVA output as given below:

Wire Color	Check to Wire Color	Resistance	DVA Reading
Brown wire	Brown/Yellow wire	950-1100	150V or more Connected
Orange wire	Orange/Black wire	93-100**	150V or more Connected
White wire	Purple	35-55	0.6V or more Connected
White wire	Blue wire	35-55	0.6V or more Connected
White wire	Green wire	35-55	0.6V or more Connected
White wire	Pink	35-55	0.6V or more Connected
White wire	Purple/White	115-125	1.6V or more Connected
White wire	Blue/White	115-125	1.6V or more Connected
White wire	Green/White	115-125	1.6V or more Connected
White wire	Pink/White	115-125	1.6V or more Connected

** NOTE: Some engines use a 50 ohm power coil.

4. Check the cranking RPM. A cranking speed of less than 250-RPM will not allow the system to fire properly.

NO SPARK OR INTERMITTENT ON ONE OR MORE CYLINDERS:

1. Check the trigger resistance and DVA output as given below:

Wire Color	Check to Wire Color	Resistance	DVA Reading
White wire	Purple	35-55	0.6V or more Connected
White wire	Blue wire	35-55	0.6V or more Connected
White wire	Green wire	35-55	0.6V or more Connected
White wire	Pink	35-55	0.6V or more Connected

2. Disconnect the white/black temperature wire and retest. If all cylinders now fire, replace the timer base.
3. Check the DVA output on the orange wires from the power pack while connected to the ignition coils. You should have a reading of at least 150V or more. If the reading is low on one cylinder, disconnect the orange wire from the ignition coil for that cylinder and reconnect it to a load resistor. Retest. If the reading is now good, the ignition coil is likely bad. A continued low reading indicates a bad power pack.

ENGINE WILL NOT ACCELERATE BEYOND 2500 RPM:
1. Use a temperature probe and verify that the engine is not overheating.
2. Disconnect the tan temperature wire from the pack and retest. If the engine now performs properly, replace the temperature switch.
3. Make sure the tan temperature switch wire is not located next to a spark plug wire.

Six Cylinder Engines
Without Quick Start

NO SPARK ON ANY CYLINDER:
1. Disconnect the black/yellow stop wires and retest. If the engine's ignition has spark, the stop circuit has a fault-possibly the key switch, harness or shift switch.
2. Check the cranking RPM. A cranking speed of less than 250-RPM will not allow the system to spark properly.
3. Disconnect the yellow wires from the rectifier and retest. If the engine now has spark, replace the rectifier.
4. Check the center hub triggering magnet in the flywheel for damage and tight fit.

NO SPARK ON ONE BANK:
1. Check the stator and trigger resistance and DVA output as given below for each bank:

Wire Color	Check to Wire Color	Resistance	DVA Reading
Brown wire	Brown/Yellow wire	450-550 (9 amp)	150V or more Connected
Brown wire	Brown/Yellow wire	900-1100 (35 amp)	150V or more Connected
White wire	Purple	15-42(a)	0.6V or more Connected
White wire	Blue wire	15-42(a)	0.6V or more Connected
White wire	Green wire	15-42(a)	0.6V or more Connected

(a) Use a comparison reading as the values for different years used different coils in the Timer-Base. As long as you have approximately the same ohm reading on all three tests and the correct output with the DVA meter, the Timer-Base should be good. The exception would be if the insulation is breaking down while the engine is running.

2. Check the DVA voltage to engine ground on the White Timer-Base wire while it is connected to the pack. You should see approximately the same reading as you do between the Brown & Brown/Yellow wires for that bank. A low reading usually indicates a bad Timer-Base.
3. Disconnect the Black/Yellow stop wire from one of the packs and retest. If the bank that had no fire now has spark, the pack that was appearing to fire correctly is faulty.

NO SPARK ON ONE CYLINDER:
1. Check the DVA output on the orange wires from the power pack while connected to the ignition coils. You should have a reading of at least 150V or more. If the reading is low on one cylinder, disconnect the orange wire from the ignition coil for that cylinder and reconnect it to a load resistor. Retest. If the reading is now good, the ignition coil is likely bad. A continued low reading indicates a bad power pack or Timer-Base.
2. Check the Timer Base resistance and DVA output as given below for each cylinder:

Wire Color	Check to Wire Color	Resistance	DVA Reading
White wire	Purple wire	15-42(a)	0.6V or more Connected
White wire	Blue wire	15-42(a)	0.6V or more Connected
White wire	Green wire	15-42(a)	0.6V or more Connected

(a) Use a comparison reading as the values for different years used different coils in the Timer-Base. As long as you have approximately the same ohm reading on all three tests and the correct output with the DVA meter, the Timer-Base should be good.

3. Inspect the ignition coil for burned or discolored areas indicating arcing.
4. Swap the ignition coil with one that is sparking correctly.
5. Banks with the power packs and see if the problem moves. If fit does, replace the power pack. If not, replace the Timer-Base.

Six Cylinder Engines
Quick Start Models

Note: These engines usually have a 35 Amp battery charging capacity. Due to the size and weight of the flywheel magnets, it is highly recommended that you check to make sure both the triggering and charge magnets are still secure in the flywheel before you service the engine. A loose or broken magnet can be deadly to you or your pocketbook. It is a recommended you index the flywheel and check the timing on all cylinders when servicing these engines. Also check for static firing and intermittent spark.

NO SPARK ON ANY CYLINDER:

1. Disconnect the black/yellow kill wires AT THE PACK and retest. If the engine's ignition now has fire, the kill circuit has a fault-possibly the key switch, harness or shift switch.
2. Disconnect the yellow wires from the stator to the rectifier and retest. If the engine fires, replace the rectifier.
3. Check the stator and trigger resistance and DVA output as given below for each bank:

Wire Color	Check to Wire Color	Resistance	DVA Reading
Brown wire	Brown/Yellow wire	900-1100 (35 amp)	150V or more Connected
Orange	Orange/Black	93-103 OEM	12-24V Connected
Orange	Orange/Black	45-55 CDI	12-24V Connected
White wire	Purple wire	(a)	0.6V or more Connected
White wire	Blue wire	(a)	0.6V or more Connected
White wire	Green wire	(a)	0.6V or more Connected
White wire	Purple wire 2nd connector	(a)	0.6V or more Connected
White wire	Blue wire 2nd connector	(a)	0.6V or more Connected
White wire	Green wire 2nd connector	(a)	0.6V or more Connected
White wire	Black/White wire 2nd connector	215-225	Not Applicable

(a) Use a comparison reading as different brands of meters will give different readings. The typical range is 1M to 5M ohms. As long as you have approximately the same ohm reading on all six tests and the correct output with the DVA meter, the Timer-Base should be good. The exception would be if one of the scr's inside the Timer-Base is breaking down while the engine is running. This can be found indexing the flywheel and checking the timing on all cylinders. If the readings are off, reverse the meter leads and retest to see if the readings are corrected.

4. Check the cranking RPM. A cranking speed less than 250-RPM will not allow the system to fire properly.

NO SPARK ON ONE CYLINDER:

1. Check the timer base's resistance and output (see NO SPARK ON ANY CYLINDER above).
2. Check the DVA output on the orange wires from the power pack while connected to the ignition coils. You should have a reading of at least 130V or more. If the reading is low on one cylinder, disconnect the orange wire from the ignition coil for that cylinder and reconnect it to a load resistor. Retest. If the reading is now good, the ignition coil is likely bad. A continued low reading indicates a bad power pack or Timer-Base.

NO SPARK ON ONE BANK:

1. Check the stator resistance and output (see NO SPARK ON ANY CYLINDER above).
2. Check the DVA output on the orange wires from the power pack while connected to the ignition coils. You should have a reading of at least 150V or more. If the reading is low on one bank, disconnect the orange wires from the ignition coil for that bank and reconnect them to a load resistor. Retest. If the reading is now good, one or all of the ignition coils are likely bad. A continued low reading indicates a bad power pack.

ENGINE WILL NOT ACCELERATE BEYOND 2500 RPM :

1. Use a temperature probe and verify that the engine is not overheating.
2. Disconnect the tan temperature wire from the pack and retest. If the engine now performs properly, replace the temperature switch.
3. Make sure the tan temperature switch wire is not located next to a spark plug wire.
4. Disconnect the VRO sensor from the engine harness and retest. If the engine performs correctly, replace the VRO or sensor.

Eight Cylinder Engines
Quick Start Models

Note: These engines usually have a 35 Amp battery charging capacity. Due to the size and weight of the flywheel magnets, it is highly recommended that you check to make sure both the triggering and charge magnets are still secure in the flywheel before you service the engine. A loose or broken magnet can be deadly to you or your pocketbook. It is a recommended you index the flywheel and check the timing on all cylinders when servicing these engines. Also check for static firing and intermittent spark.

NO SPARK ON ANY CYLINDER:

1. Disconnect the black/yellow kill wires AT THE PACK and retest. If the engine's ignition now has fire, the kill circuit has a fault-possibly the key switch, harness or shift switch.
2. Disconnect the yellow wires from the stator to the rectifier and retest. If the engine fires, replace the rectifier.
3. Check the stator and trigger resistance and DVA output as given below for each bank:

Wire Color	Check to Wire Color	Resistance	DVA Reading
Brown wire	Brown/Yellow wire	900-1100 (35 amp)	150V or more Connected
Orange	Orange/Black	93-103 OEM	12-24V Connected
Orange	Orange/Black	40-55 CDI	12-24V Connected
White wire	Purple wire	(a)	0.6V or more Connected
White wire	Blue wire	(a)	0.6V or more Connected
White wire	Green wire	(a)	0.6V or more Connected
White wire	Pink wire	(a)	0.6V or more Connected
White wire	Purple wire 2nd connector	(a)	0.6V or more Connected
White wire	Blue wire 2nd connector	(a)	0.6V or more Connected
White wire	Green wire 2nd connector	(a)	0.6V or more Connected
White wire	Pink wire 2nd connector	(a)	0.6V or more Connected
White wire	Black/White wire 2nd connector	215-225	Not Applicable

(a) Use a comparison reading as different brands of meters will give different readings. The typical range is 1M to 5M ohms. As long as you have approximately the same ohm reading on all six tests and the correct output with the DVA meter, the Timer-Base should be good. The exception would be if one of the scr's inside the Timer-Base is breaking down while the engine is running. This can be found indexing the flywheel and checking the timing on all cylinders. If the readings are off, reverse the meter leads and retest to see if the readings are corrected.

4. Check the cranking RPM. A cranking speed less than 250-RPM will not allow the system to fire properly.

NO SPARK ON ONE CYLINDER:

1. Check the timer base's resistance and output (see NO SPARK ON ANY CYLINDER above).
2. Check the DVA output on the orange wires from the power pack while connected to the ignition coils. You should have a reading of at least 130V or more. If the reading is low on one cylinder, disconnect the orange wire from the ignition coil for that cylinder and reconnect it to a load resistor. Retest. If the reading is now good, the ignition coil is likely bad. A continued low reading indicates a bad power pack or Timer-Base.

NO SPARK ON ONE BANK:

1. Check the stator resistance and output (see NO SPARK ON ANY CYLINDER above).
2. Check the DVA output on the orange wires from the power pack while connected to the ignition coils. You should have a reading of at least 150V or more. If the reading is low on one bank, disconnect the orange wires from the ignition coil for that bank and reconnect them to a load resistor. Retest. If the reading is now good, one or all of the ignition coils are likely bad. A continued low reading indicates a bad power pack.

ENGINE WILL NOT ACCELERATE BEYOND 2500 RPM :

1. Use a temperature probe and verify that the engine is not overheating.
2. Disconnect the tan temperature wire from the pack and retest. If the engine now performs properly, replace the temperature switch.
3. Make sure the tan temperature switch wire is not located next to a spark plug wire.
4. Disconnect the VRO sensor from the engine harness and retest. If the engine performs correctly, replace the VRO or sensor.

Troubleshooting the Johnson/Evinrude 60° 6 Cylinder Ignition (OIS 2000) Carbureted 1991-2006 Model Years

Due to the differences in this ignition system, troubleshooting can be somewhat difficult if you are not familiar with the design. The other Johnson/Evinrude QuickStart ignitions use stator charge coils and a power coil to provide high voltage and power for the QuickStart and rev limiter circuits. They require a timer base for triggering and use separate magnets for the high voltage and triggering the timer base. The OIS 2000 Optical system uses the stator charge coils to provide high voltage for the firing of the ignition coils *and* a *power coil to provide power for the electronics, both inside the power pack and inside the sensor.* The other QuickStart models will run the engine without the power coil being connected (of course this will burn out the control circuits inside the power pack). The OIS 2000 ignition has to have the power coil supplying power in order to operate the QuickStart, S.L.O.W., rev limiter, and fire the coils beyond cranking speed. The optical sensor located on the top is fed power from the power pack and sends crankshaft position, cylinder location and direction of rotation back to the power pack. The pack is smart enough to know not to fire if the engine is not turning in the right direction. S.L.O.W. functions reduce the engine RPM to approximately 2500 when the engine over-heats or the no oil warning is activated. QuickStart (a 10° timing advance) activates as long as the engine RPM is below 1100, the engine temperature is below 105° F and the Yellow/Red wire from the starter solenoid is not feeding 12V DC to the power pack all of the time. QuickStart will also activate for 5-10 seconds each time the engine is started regardless of engine temperature. CDI Electronics (blue case with red sleeve) power packs have a built-in feature to compensate for a shorted cold sensor, allowing the engine to exit QuickStart after 5 minutes of running time regardless of the condition of the cold sensor. The CDI power pack also will not fire if the wrong encoder wheel (4 cylinder) is installed by mistake. At cranking speed the voltage from the stator may not be enough to operate the circuits inside the power pack. Therefore, battery voltage supplied via the yellow/red striped start wire. The extra voltage is needed in order for the optical sensor to operate correctly as low voltage from the battery and/or stator can cause intermittent or no fire at all. There are a couple of critical items you should be aware of on these engines. First, the spark plug wires have to be the Gray *inductive* resistor wires – these are NOT automotive wires. Secondly, the spark plugs should be the factory recommended QL78YC. Use of other spark plugs or wires can cause problems inside the power pack from RFI and MFI noise. CDI Electronics has the spark plug wires available as a set, P/N: 931-4921.

A breakthrough at CDI Electronics has allowed the use of microprocessor digital control circuits to handle the timing, QuickStart, S.L.O.W., rev limiter and data logging inside the power pack. This allows the timing to be set using a timing light, remote starter, spark gap tester, piston stop tool and a jumper wire. With these new digital power packs, you disconnect the port temperature switch/sensor leads and use a jumper wire to short the tan temperature sensor wire to engine ground. Once you have verified the timing pointer using a piston stop tool (Or a dial indicator), connect all spark plug wires to a spark gap tester, connect a remote starter to the engine and a timing light to # 1 spark plug wire. When you crank the engine over with the remote starter and check the timing, you should see the timing is set to approximately 4°-6° ATDC (After Top Dead Center). By advancing the throttle all the way and rechecking the timing for WOT (Wide Open Throttle), you should see approximately 19° - 20° BTDC (Before Top Dead Center) Without this timing feature built into the power pack, you will need the 511-4017 Timing Tool or the OEM version to set the timing for idle and WOT. Additional advantages offered by the digital circuitry include the ability to compensate for a bad temperature switch, a smoother rev limit, customized rev limiters and special timing curves.

Additional items to be aware of:

1. Early 150 and 175 HP engines did not have the tension washer on top of the sensor encoder wheel. This washer is required to keep the encoder locked in place. If it is missing, be sure to install the correct washer.
2. 1991 and 1992 engines did not have a shift interrupter switch. This resulted in hard shifting and required a conversion to resolve this problem.
3. The shift interrupter switch killed the fire on the starboard bank of cylinders from 1993 thru mid 1990's. By 1998, a change was made for the shift interrupter switch to kill the fire on the Port bank.
4. 1991 through late 1990's engines occasionally developed a crack in the water jacket allowing water into the intake at high speed. This typically resulted in # 1 cylinder ingesting water. You can usually see signs of this because the head looks like it has been steam cleaned inside the combustion chamber.
5. 1991 and 1992 engines came out with a Black sleeved power pack (P/N 584122) and stator (P/N 584109) and used a P/N 584265 sensor. In 1993 the power packs were changed to a Gray sleeve (Production) power pack (P/N 584910). The stator was changed to a Gray sleeve (P/N 584981) and the sensor was changed to P/N 584914. Engines with ignition problems had a service replacement power pack with a blue sleeve and a replacement sensor installed as a set. The Blue sleeved power pack was only available as a service replacement. The Gray sleeved stator could be used with all of the power packs, but the Black sleeved stator was to be used only with a Black sleeved power pack. The sensor P/N changed to 586343 in the late 1990's.

Troubleshooting the Johnson/Evinrude 60° 6 Cylinder Ignition (OIS 2000)
1991-2006 Model Years (Continued)

6. Some engines do not have the RFI/MFI noise shield between the ignition coils and the power pack. If it is missing, replace it.
7. The Gray inductive spark plug wires replaced the Black copper spark plug wires that were used on the early 1990's engines.
8. Originally the spark plugs were the QL82YC, but that recommendation was changed to the QL78YC for improved performance.

NO FIRE AT ALL:

1. Check the kill lanyard and key-switch position.
2. Verify the engine rotation (The engine needs to be turning in a clockwise direction).
3. Check the power pack and ignition coil ground wires for corrosion and tightness.
4. Connect a spark gap tester to all cylinders.
5. Disconnect the boat side harness and connect a remote starter unit. Check for spark. If the engine has spark, check the boat side harness's Black/Yellow wire for shorts to ground.
6. Disconnect the 5-pin connector on the port side of the power pack and see if the spark returns. If it does, use the CDI meter set to Ohms and see if the Black/Yellow wires are shorted to engine ground.
7. Check the battery voltage on the Yellow/Red striped wire while cranking the engine. If below 11 volts, charge the battery or check all battery cables.
8. Remove the sensor wheel and check for damage, especially where the top slots are located. Sometimes the wheels will break out where the windows overlap.

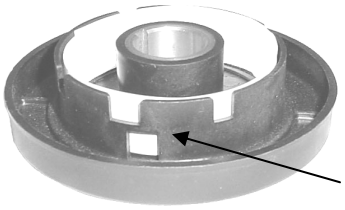

(This area is the most common breakout location)

9. Check the sensor eyes for dirt, grease, etc. If you have to clean it, use denatured alcohol and a Q-tip. Do not use any other cleaning agent because damage to the optical lens will occur.
10. Disconnect the voltage regulator/rectifier and retest. If the engine now has spark, replace the regulator/rectifier.
11. Using the Piercing Probes, check the resistance, then check the DVA voltage on the 6 pin stator connector while connected as follows:

Red Lead	Black Lead	Resistance	DVA Reading
Orange	Orange/Black	50-60 ohms	12 V or more
Brown	Brown/Yellow	450-600 ohms	150V or more
Brown/White	Brown/Black	450-600 ohms	150V or more

Note: Low readings on all checks indicate a possible problem with the flywheel magnets that require checking.

Service note: It is recommended that liquid neoprene be applied to the areas where the piercing probes were used.

12. If all the tests so far show good readings, check the DVA output from the power pack on the primary coil wires as follows:

Red Lead	Black Lead	DVA Reading
Orange/Blue	Engine Ground	130 V or more
Orange	Engine Ground	130 V or more
Orange/Green	Engine Ground	130 V or more

Note: If the DVA values are below these specifications, the power pack or sensor is likely bad.

13. Check the DVA voltage on the Black/Orange and Orange/Red sensors leads as follows:

Red Lead	Black Lead	DVA Reading
Orange/Red	Engine Ground	12 V or more
Black/Orange	Engine Ground	12 V or more

WARNING!! The Black/Orange wire should NEVER be shorted to engine ground as this will damage the sensor.

14. If an oscilloscope is available, check the white/blue (crank position signal) and white/green (cylinder position signal) sensor wires while connected to the sensor. With the engine cranking over, you should see a square toothed pattern on both wires. The white/blue wire should show 1 pulse per revolution and the white/green should show 7 pulses per revolution of the engine. See chart below.

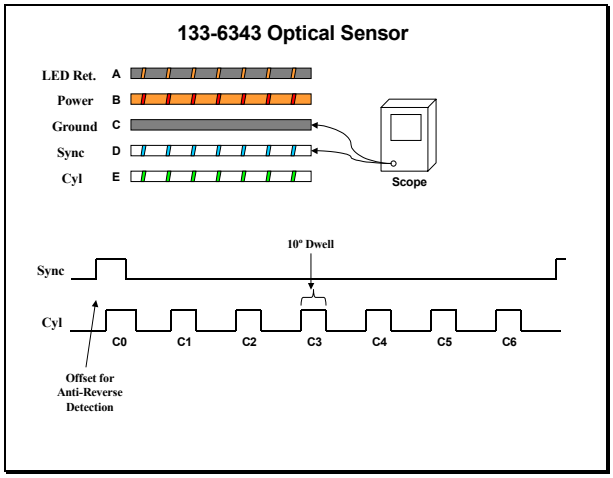

a. Led Power – Black/Orange
b. Power – Orange Red
c. Ground – Black
d. Sync – White/Blue Stripe
e. Cyl – White/Green

No Spark on One Bank of Cylinders:

1. Using the Piercing Probes and DVA adapter, check the resistance and DVA voltage for the bank without spark on the 6 pin stator connector while connected as follows:

Red Lead	Black Lead	Ohms Resistance	DVA	Bank/Cyl
Brown	Brown/Yellow	450-600 ohms	150V +	Stbd (1,3,5)
Brown/White	Brown/Black	450-600 ohms	150V +	Port (2,4,6)

NOTE: If the power pack has no spark on one bank and the readings are good, replace the power pack.

2. Disconnect the 5-pin connector on the port side of the power pack and see if the spark returns. If it does, use the CDI meter set to Ohms and see if the Black/Yellow or Black/Orange wire is shorted to engine ground. Check to see if the Shift Interrupter switch is located in the circuit where there is no spark.

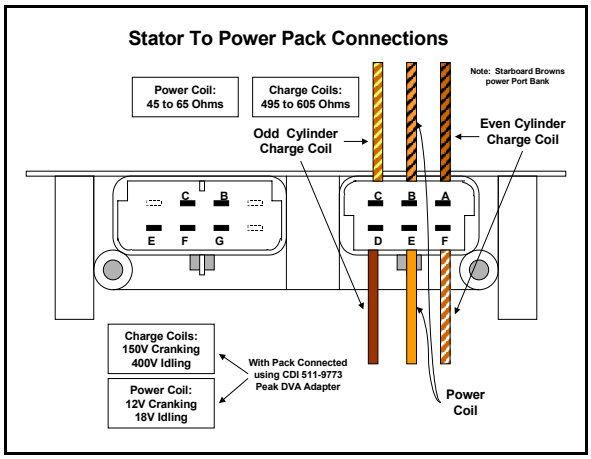

6 Pin Connector

a) Brown/Black
b) Orange/Black
c) Brown/Yellow
d) Brown
e) Orange
f) Brown/White

Troubleshooting the Johnson/Evinrude 60° 6 Cylinder Ignition (OIS 2000)
1991-2006 Model Years (Continued)

High Speed Miss:

1. If the engine runs fine until you get above 4900 RPM and then starts missing, check the Orange to Orange/Black power coil wires with an oscilloscope (If available) or replace the pack. A breakdown inside the pack could cause RFI noise to activate the rev limiter for no apparent reason.
2. Using the Piercing Probes and DVA adapter, check the DVA voltage at the RPM where the problem is occurring while connected as follows:

Red Lead	Black Lead	DVA	Bank/Cylinder
Brown	Brown/Yellow	150V +	Starboard (1,3,5)
Brown/White	Brown/Black	150V +	Port (2,4,6)

NOTE: The readings should rapidly increase as the engine RPM increases and stabilize below 400 volts (voltage exceeding 400 V DVA indicates a bad pack). A sharp drop in voltage right before the miss becomes apparent usually indicates a bad stator charge coil.

3. Connect an inductive tachometer to the spark plug wires one at a time and compare the readings. If most of the cylinders show the same reading and one or two show different readings, check the primary wires with the inductive pickup to see if the readings are the same coming out of the power pack. A difference in readings between the primary and secondary coil wires usually indicate bad ignition wires. No difference indicates a bad power pack.

Will Not Rev Above Idle Speed or Only Has Spark as Long as the Starter Solenoid is Activated:

Using the Piercing Probes and DVA adapter, check the DVA voltage while connected as follows:

Red Lead	Black Lead	DVA
Orange	Orange/Black	11-24V

NOTE: The readings should rapidly increase as the engine RPM increases and stabilize below 24 volts (voltage exceeding 24 V DVA indicates a bad pack). A sharp drop in voltage right before the miss becomes apparent usually indicates a bad stator winding. A sharp drop in voltage when you let off of the starter solenoid indicates a bad power coil on the stator.

Engine Will Not Rev Above 2500 RPM *and Shakes Hard* (SLOW Activated):

1. Verify the engine is not actually over-heating by using a digital pyrometer.
2. Check the routing of the tan temperature wires, an example of a bad location is shown below. The tan wires have to be located as far away as possible from the spark plug wires.

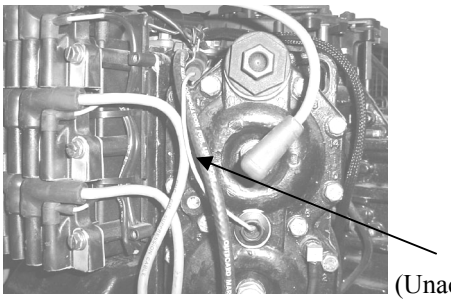

(Unacceptable routing for the temp wire.)

3. Disconnect the temperature sensors and see if the engine performs normally. If it does, check both temperature sensors and replace the defective one.
4. If there is not any indication of a problem at this point, replace the power pack.

Engine stays in QuickStart All of the Time:

Check the Yellow/Red wire for 12 volts while the engine is running. You should only see voltage on this wire while the starter solenoid is engaged.

Troubleshooting the Johnson/Evinrude 60° 4 Cylinder Ignition (OIS 2000) Carbureted 1995-2006 Model Years

Due to the differences in this ignition system, troubleshooting can be somewhat difficult if you are not familiar with the design. The other Johnson/Evinrude QuickStart ignitions use stator charge coils and a power coil to provide high voltage and power for the QuickStart and rev limiter circuits. They require a timer base for triggering and use separate magnets for the high voltage and triggering the timer base. The OIS 2000 Optical system uses the stator charge coil to provide high voltage for the firing of the ignition coils *and* a *power coil to provide power for the electronics, both inside the power pack and inside the sensor.* The other QuickStart models will run the engine without the power coil being connected (of course this will burn out the control circuits inside the power pack). The OIS 2000 ignition has to have the power coil supplying power in order to operate the QuickStart, S.L.O.W., rev limiter, and fire the coils beyond cranking speed. The optical sensor located on the top is fed power from the power pack and sends crankshaft position, cylinder location and direction of rotation back to the power pack. The pack is smart enough to know not to fire if the engine is not turning in the right direction. S.L.O.W. functions reduce the engine RPM to approximately 2500 when the engine over-heats or the no oil warning is activated. QuickStart (a 10° timing advance) activates as long as the engine RPM is below 1100, the engine temperature is below 105° F and the Yellow/Red wire from the starter solenoid is not feeding 12V DC to the power pack all of the time. QuickStart will also activate for 5-10 seconds each time the engine is started regardless of engine temperature. CDI Electronics (blue case with red sleeve) power packs have a built-in feature to compensate for a shorted cold sensor, allowing the engine to come out of QuickStart after 5 minutes of running time regardless of the condition of the cold sensor. The CDI power pack will not fire if the wrong encoder wheel (6 cylinder) is installed by mistake.

At cranking speed the voltage from the stator may not be enough to operate the circuits inside the power pack, therefore there is battery voltage supplied from the starter solenoid via the yellow/red striped wire. The extra voltage is needed in order for the optical sensor to operate correctly as low voltage from the battery and/or stator can cause intermittent or no fire at all. There are a couple of critical items you should be aware of on these engines. First, the spark plug wires have to be the Gray *inductive* resistor wires – these are NOT automotive wires. Secondly, the spark plugs have to be the factory recommended QL78YC. Use of other spark plugs or wires can cause problems inside the power pack from RFI and MFI noise. CDI Electronics has the spark plug wires available as a set, P/N: 931-4921.

A breakthrough at CDI Electronics has allowed the use of microprocessor digital control circuits to handle the timing, QuickStart, S.L.O.W., rev limiter and data logging inside the power pack. This allows the timing to be set using a timing light, remote starter, spark gap tester, piston stop tool and a jumper wire. With these new digital power packs, you disconnect the port temperature switch/sensor leads and use a jumper wire to short the tan temperature sensor wire to engine ground. Once you have verified the timing pointer using a piston stop tool (Or a dial indicator), connect all spark plug wires to a spark gap tester, connect a remote starter to the engine and a timing light to # 1 spark plug wire. When you crank the engine over with the remote starter and check the timing, you should see the timing is set to approximately 4°-6° ATDC (After Top Dead Center). By advancing the throttle all the way and rechecking the timing for WOT (Wide Open Throttle), you should see approximately 19° - 21° BTDC (Before Top Dead Center) Without this timing feature built into the power pack, you would not be able to easily set the timing for idle or WOT without a optical diagnostic tool. Additional advantages offered by the digital circuitry include the ability to compensate for a bad temperature switch, a smoother rev limit, customized rev limiters and special timing curves.

Additional items to be aware of:

1. Some engines do not have the RFI/MFI noise shield between the ignition coils and the power pack. If it is missing, replace it.
2. Originally the spark plugs were the QL82YC, but that recommendation was changed to the QL78YC for improved performance.

NO FIRE AT ALL:

1. Check the kill lanyard and key-switch position.
2. Verify the engine rotation (The engine needs to be turning in a clockwise direction).
3. Check the power pack and ignition coil ground wires for corrosion and tightness.
4. Connect a spark gap tester to all cylinders.
5. Disconnect the boat side harness and connect a remote starter unit. Check for spark. If the engine has spark, check the boat side harness's Black/Yellow wire for shorts to ground.
6. Disconnect the 4-pin connector on the port side of the power pack and see if the spark returns. If it does, use the CDI meter set to Ohms and see if the Black/Yellow wires are shorted to engine ground.
7. Check the battery voltage on the Yellow/Red striped wire while cranking the engine. If below 11 volts, charge the battery or check all battery cables.
8. Remove the sensor wheel and check for damage, especially where the top slots are located. Sometimes the wheels will break out where the windows overlap.

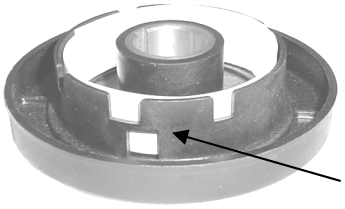

(This area is the most common breakout location)

9. Check the sensor eyes for dirt, grease, etc. If you have to clean it, use denatured alcohol and a Q-tip. Do not use any other cleaning agent because damage to the optical lens will occur.
10. Disconnect the voltage regulator/rectifier and retest. If the engine now has spark, replace the regulator/rectifier.
11. Using the Piercing Probes, check the resistance, then check the DVA voltage on the 6 pin stator connector while connected as follows:

Red Lead	Black Lead	Resistance	DVA Reading
Orange	Orange/Black	50-60 ohms	12 V or more
Brown	Brown/Yellow	450-600 ohms	150V or more

Note: Low readings on all checks indicate a possible problem with the flywheel magnets that require checking.
Service note: It is recommended that liquid neoprene be applied to the areas where the piercing probes were used.

12. If all the tests so far show good readings, check the DVA output from the power pack on the primary coil wires as follows:

Red Lead	Black Lead	DVA Reading
Orange/Blue	Engine Ground	130 V or more
Orange/Green	Engine Ground	130 V or more

Note: If the DVA values are below these specifications, the power pack or sensor is likely bad.

13. Check the DVA voltage on the Black/Orange and Orange/Red sensors leads as follows:

Red Lead	Black Lead	DVA Reading
Orange/Red	Engine Ground	12 V or more
Black/Orange	Engine Ground	12 V or more

WARNING!! The Black/Orange wire should NEVER be shorted to engine ground as this will damage the sensor.

14. If an oscilloscope is available, check the white/blue (crank position signal) and white/green (cylinder position signal) sensor wires while connected to the sensor. With the engine cranking over, you should see a square toothed pattern on both wires. The white/blue wire should show 1 pulse per revolution and the white/green should show 7 pulses per revolution of the engine. See chart below.

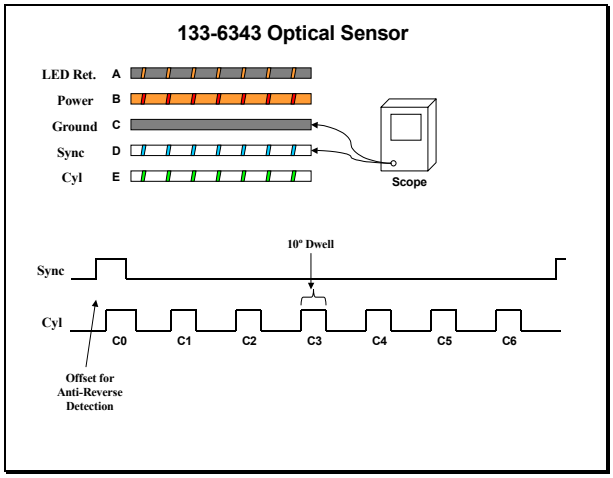

f. Led Power – Black/Orange
g. Power – Orange Red
h. Ground – Black
i. Sync – White/Blue Stripe
j. Cyl – White/Green

No Spark on One Bank of Cylinders:

1. If the power pack has no spark on one bank and the readings are good, replace the power pack.
2. Disconnect the 4-pin connector on the port side of the power pack and see if the spark returns. If it does, use the CDI meter set to Ohms and see if the Black/Yellow wire is shorted to engine ground.
3. Check to see if the Shift Interrupter switch is shorted.

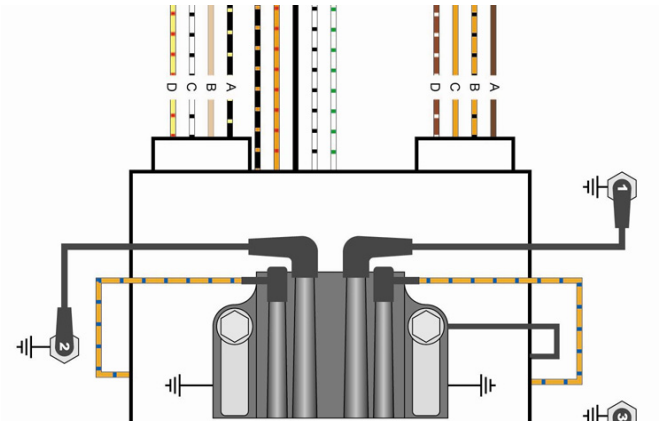

Port 4 Pin Connector	Starboard 4 Pin Connector
a) Black/Yellow	a) Brown
b) Tan	b) Orange/Black
c) White/Black	c) Orange
d) Yellow/Red	d) Brown/Yellow

High Speed Miss:

1. If the engine runs fine until you get above 4900 RPM and then starts missing, check the Orange to Orange/Black power coil wires with an oscilloscope (If available) or replace the pack. A breakdown inside the pack could cause RFI noise to activate the rev limiter for no apparent reason.
2. Using the Piercing Probes and DVA adapter, check the DVA voltage at the RPM where the problem is occurring while connected as follows:

Red Lead	Black Lead	DVA
Brown	Brown/Yellow	150V +

NOTE: The readings should rapidly increase as the engine RPM increases and stabilize below 400 volts (voltage exceeding 400 V DVA indicates a bad pack). A sharp drop in voltage right before the miss becomes apparent usually indicates a bad stator charge coil.

3. Connect an inductive tachometer to the spark plug wires one at a time and compare the readings. If most of the cylinders show the same reading and one or two show different readings, check the primary wires with the inductive pickup to see if the readings are the same coming out of the power pack. A difference in readings between the primary and secondary coil wires usually indicate a bad coil or bad ignition wires. No difference indicates a bad power pack.

Will Not Rev Above Idle Speed or Only Has Spark as Long as the Starter Solenoid is Activated:

Using the Piercing Probes and DVA adapter, check the DVA voltage while connected as follows:

Red Lead	Black Lead	DVA
Orange	Orange/Black	11-24V

NOTE: The readings should rapidly increase as the engine RPM increases and stabilize below 24 volts (voltage exceeding 24 V DVA indicates a bad pack). A sharp drop in voltage right before the miss becomes apparent usually indicates a bad stator winding. A sharp drop in voltage when you let off of the starter solenoid indicates a bad power coil on the stator.

Engine Will Not Rev Above 2500 RPM *and Shakes Hard* (SLOW Activated):

1. Verify the engine is not actually over-heating by using a digital pyrometer.
2. Check the routing of the tan temperature wires, an example of a bad location is shown below. The tan wires have to be located as far away as possible from the spark plug wires.

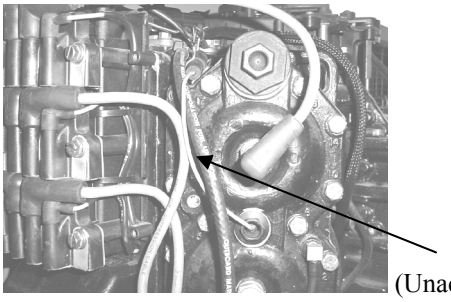

(Unacceptable routing for the temp wire.)

3. Verify the engine is not overheating and disconnect the Tan temperature sensor wire. If the engine performs normally, check both temperature sensors and replace the defective one.
4. If there is not any indication of a problem at this point, replace the power pack.

Engine stays in QuickStart All of the Time:
Check the Yellow/Red wire for 12 volts while the engine is running. You should only see voltage on this wire while the starter solenoid is engaged.

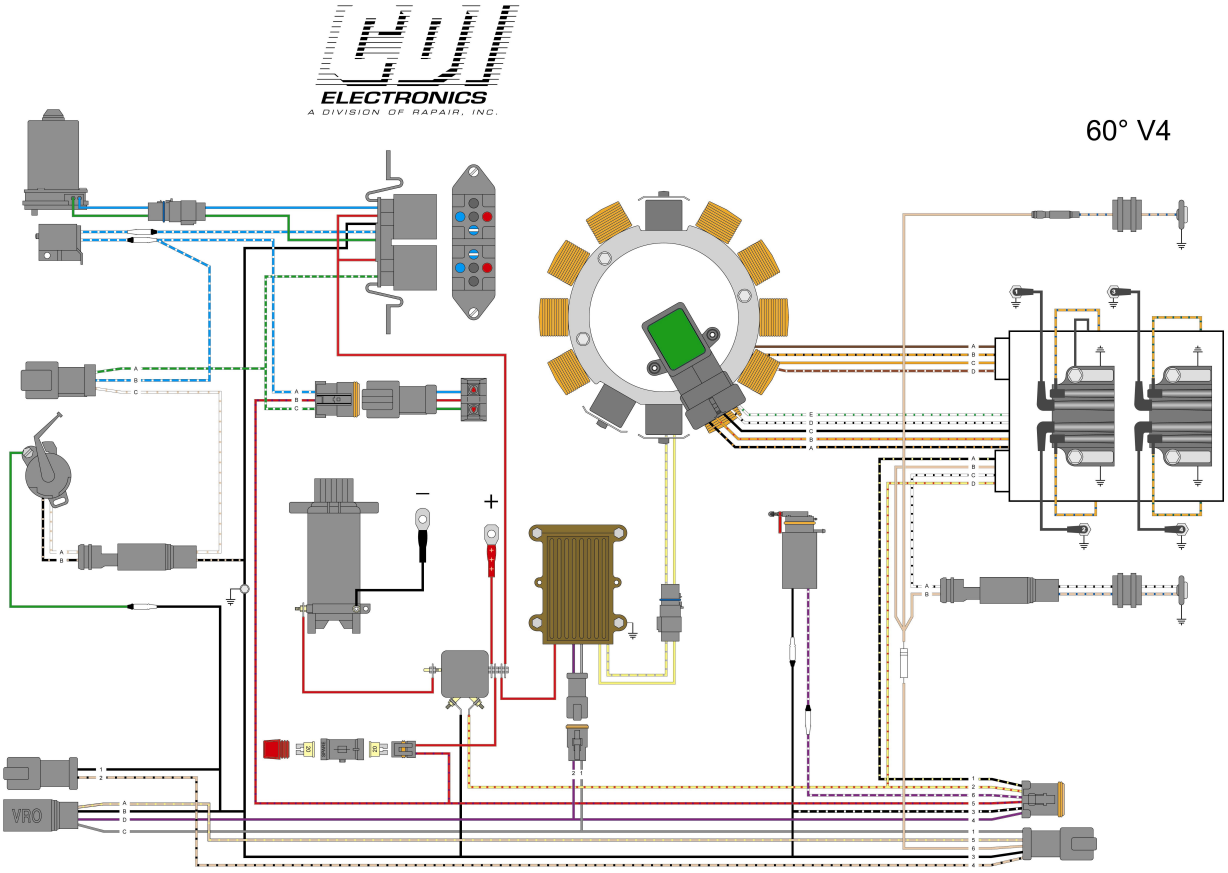

CDI ELECTRONICS

(DVA) PEAK READING VOLTAGE AND RESISTANCE CHARTS

NOTICE: These charts were compiled using the CDI 511-9773 Peak Adapter with a shielded Digital Multimeter.

NOTE: The resistance readings are given for a room temperature of 68°F. Higher temperatures will cause a slightly higher resistance reading. DVA readings should always be taken with everything hooked up with the exception of the kill circuit.

The CDI peak reading voltage adapter is specifically designed to work with shielded Digital Multimeters. This adapter will simplify the testing of electronic ignition systems, stators, sensors and charging systems. The DVA readings will be approximately the same as any other DVA meter and the specifications listed in the service manuals can be followed without problems (Hopefully a little easier to you).

The CDI piercing probe set (511-9770) and the pack load resister (511-9775) are highly recommended for use with this adapter.

INSTRUCTIONS

1. Plug the adapter into the shielded Digital Multimeter with the (+) rib side pin in the (V, Ohms) jack and the other pin in the (COM) jack.
2. Set the digital voltmeter to DC Volts (the purpose of the adapter is to convert and *store* the voltage so that it can be read by a meter).
3. Connect the probes to the component to be measured.

NOTE: The adapter will ***automatically compensate for polarity*** *and all readings will be peak voltage.*

See the following pages for readings of Chrysler, Force, Mercury, OMC (Johnson/Evinrude), OMC Sea Drive and Yamaha engines. Other ignitions can be tested using test results given by the manufacturer of the equipment or by comparing a known good system to a suspect one. Please forward any additional readings you would like to have included in future printings.

Johnson & Evinrude Outboard

DVA (Peak Voltage) and Resistance Chart

HP	Year	Ignition	Stator						Trigger		
		Part	Chg	Power	Chg	Power	Chg	Power		DVA	Reading
		Number	Ohms Reading		DVA Output		Read	Color	Ohm	Out	Colors
4-55	1971-1977	Power Pack 2	450-600	N/A	150V+	N/A	Brown to Engine Gnd	N/A	10-20	0.5V+	White/Black to Black/White
4-60	1978-1988	CD2	450-600	N/A	150V+	N/A	Brown to Brown/Yellow	N/A	35-55	0.5V+	White/Black to Black/White
4-55	1989-1993	CD2 - USL	450-950	N/A	150V+	N/A	Brown to Brown/Yellow	N/A	N/A	N/A	N/A
4-55	1989-1993	CDI Elect-USL Repl*	450-600	N/A	150V+	N/A	Brown to Brown/Yellow	N/A	35-55	0.5V+	White/Black to Black/White
5-60	1992-2000	CD2 W/SLOW	450-600	N/A	150V+	N/A	Brown to Brown/Yellow	N/A	35-55	0.5V+	White/Black to Black/White
5-60	1992-2005	CD2 SL	500-700	450-600	150V+	12-24V	Brown to Brown/Yellow	Org to Org/Blk	35-55	0.5V+	White/Black to Black/White
25-35 Elect Start	1995-1997	CD3 OPTICAL	720-880	52-62	150V+	12V+	Brown to Brown/Yellow	Org to Org/Blk	N/A	N/A	N/A
25-35 Man Start	1995-1997	CD3 OPTICAL	1010-1230	76-92	150V+	12V+	Brown to Brown/Yellow	Org to Org/Blk	N/A	N/A	N/A
60	1986-1989	CD3	450-600	N/A	150V+	N/A	Brown to Brown/yellow	N/A	35-45	0.5V+	Wht to Blue/Pur/Grn
60	1989-1992	CD3 W/SLOW	450-600	90-100 40-50*	150V+	12V+	Brown to Brown/yellow	Org to Org/Blk	35-45	0.5V+	Wht to Blue/Pur/Grn
60	1993-2000	CD3 Looper	500-700	450-600 40-50*	150V+	12V+	Brown to Brown/yellow	Org to Org/Blk	Open	0.5V+	Wht to Bl/Pur/Grn
65 - 70	1972-1978	Power Pack 3	450-600	N/A	150V+	N/A	Brown to Brown/yellow	N/A	10-20	0.5V+	Black/White to White/Blacks
65	1989	CD3 W/SLOW	450-600	90-100 40-50*	150V+	12V+	Brown to Brown/yellow	Org to Org/Blk	35-45	0.5V+	Wht to Blue/Pur/Grn
65	1992-1995	CD4	450-600	N/A	150V+	N/A	Brown to Brown/yellow	N/A	35-45	0.5V+	Wht to Bl/Pur/Grn/Pk
65 COMM	1984-1988	CD3	450-600	N/A	150V+	N/A	Brown to Brown/yellow	N/A	35-45	0.5V+	Wht to Bl/Pur/Grn
65 COM Elect Start	1989-1992	CD3	450-600	N/A	150V+	N/A	Brown to Brown/yellow	N/A	35-45	0.5V+	Wht to Bl/Pur/Grn
65 COM Man Start	1989-1992	CD3 W/SLOW	500-700	450-600 40-50*	150V+	12V+	Brown to Brown/yellow	Org to Org/Blk	35-45	0.5V+	Wht to Bl/Pur/Grn
65 COM	1992-1995	CD3 W/SLOW	500-700	450-600 40-50*	150V+	12V+	Brown to Brown/yellow	Org to Org/Blk	35-45	0.5V+	Wht to Bl/Pur/Grn
70	1979-1988	CD3	450-600	N/A	150V+	N/A	Brown to Brown/yellow	N/A	35-45	0.5V+	Wht to Bl/Pur/Grn
70	1989-1997	CD3 W/SLOW	450-700	450-600 40-50*	150V+	12V+	Brown to Brown/yellow	Org to Org/Blk	35-45	0.5V+	Wht to Bl/Pur/Grn
80	1992-1996	CD4	450-600	N/A	150V+	N/A	Brown to Brown/yellow	N/A	35-45	0.5V+	Wht to Bl/Pur/Grn/Pk
85 - 140	1973-1977	Power Pack 4	450-600	N/A	150V+	N/A	Brown to Brown/yellow	N/A	10 - 20	0.5V+	#1 to #3 and #2 to #4
85	1979-1983	CD4	450-600	N/A	150V+	N/A	Brown to Brown/yellow	N/A	35-45	0.5V+	Wht to Bl/Pur/Grn/Pk
85	1991-1995	CD4	450-600	N/A	150V+	N/A	Brown to Brown/yellow	N/A	35-45	0.5V+	Wht to Bl/Pur/Grn/Pk
88	1987-1996	CD4	450-600	N/A	150V+	N/A	Brown to Brown/yellow	N/A	35-45	0.5V+	Wht to Bl/Pur/Grn/Pk
90	1984-1997	CD4	450-600	N/A	150V+	N/A	Brown to Brown/yellow	N/A	35-45	0.5V+	Wht to Bl/Pur/Grn/Pk
90 - 115 OPTICAL	1995-2006	CD4AL	450-600	50-60	150V+	12V+	Brown to Brown/yellow	Org to Org/Blk	N/A	N/A	N/A
100	1990-1994	CD4	450-600	N/A	150V+	N/A	Brown to Brown/yellow	N/A	35-45	0.5V+	Wht to Bl/Pur/Grn/Pk

N/A = Not Applicable
*Part Manufactured by CDI Electronics
COMM = Commercial

Sec = Secondary
Pri = Primary

Org/Blk = Orange/Black Stripe
Blk = Black
Gnd = Ground

Pk = Pink
Pur = Purple
Bl = Blue

NOTE: Ignition Coils will read 0.2 to 1.0 ohms on the Primary and 200-400 ohms on the secondary windings

NOTICE: ALL DVA READINGS ARE TO BE TAKEN WITH ALL WIRING CONNECTED EXCEPT THE STOP CIRCUIT.

Johnson & Evinrude Outboard

DVA (Peak Voltage) and Resistance Chart

HP	Year	Ignition	Stator						Trigger		
		Part	Chg	Power	Chg	Power	Chg	Power		DVA	Reading
		Number	Ohms Reading		Min DVA Output		Read	Color	Ohm	Out	Colors
100 COMM	1984-1997	CD4	450-600	N/A	150V+	N/A	Brown to Brown/yellow	N/A	35-45	0.5V+	Wht to Bl/Pur/Grn/Pk
105 JET OPTICAL	1994-2000	CD6AL	450-600	50-60	150V+	12V+	Brown to Brown/yellow	Org to Org/Blk	N/A	N/A	N/A
110	1986-1989	CD4	450-600	N/A	150V+	N/A	Brown to Brown/yellow	N/A	35-45	0.5V+	Wht to Bl/Pur/Grn/Pk
112	1994-1996	CD4	450-600	N/A	150V+	N/A	Brown to Brown/yellow	N/A	35-45	0.5V+	Wht to Bl/Pur/Grn/Pk
115	1978-1997	CD4	450-600	N/A	150V+	N/A	Brown to Brown/yellow	N/A	35-45	0.5V+	Wht to Bl/Pur/Grn/Pk
120-140 10 AMP	1985-1999	CD4	450-700	450-600 40-50*	150V+	12V+	Brown to Brown/yellow	Org to Org/Blk	35-45	0.5V+	Wht to Bl/Pur/Grn/Pk
120-140 35 AMP	1985-1994	CD4	735-935	N/A	150V+	N/A	Brown to Brown/yellow	N/A	35-45	0.5V+	Wht to Bl/Pur/Grn/Pk
125	1991-1994	CD4	450-700	450-600 40-50*	150V+	12V+	Brown to Brown/yellow	Org to Org/Blk	35-45	0.5V+	Wht to Bl/Pur/Grn/Pk
125 COMM	1989-1994	CD4	450-700	90-100 40-50*	150V+	12V+	Brown to Brown/yellow	Org to Org/Blk	35-45	0.5V+	Wht to Bl/Pur/Grn/Pk
130	1994-2000	CD4AL	450-700	450-600 40-50*	150V+	12V+	Brown to Brown/yellow	Org to Org/Blk	35-45	0.5V+	Wht to Bl/Pur/Grn/Pk
140	1978-1984	CD4	450-600	N/A	150V+	N/A	Brown to Brown/yellow	N/A	35-45	0.5V+	Wht to Bl/Pur/Grn/Pk
150 - 235	1977-1978	Power Pack 3/6	450-600	N/A	150V+	N/A	Brown to Engine Gnd	N/A	10-20	0.5V+	Black/White to White/Blacks
150 - 185 10 AMP	1979-1988	CD3/6	450-600	N/A	150V+	N/A	Brown to Brown/yellow	N/A	35-45	0.5V+	Wht to Bl/Pur/Grn
150 - 185 35 AMP	1984-1988	CD3/6	735-935	N/A	150V+	N/A	Brown to Brown/yellow	N/A	35-45	0.5V+	Wht to Bl/Pur/Grn
150 - 175 10 AMP	1989-1991	CD3/6	450-600	N/A	150V+	N/A	Brown to Brown/yellow	N/A	35-45	0.5V+	Wht to Bl/Pur/Grn
150 - 175 35 AMP	1989-1991	CD3/6	735-935	90-100 40-50*	150V+	12V+	Brown to Brown/yellow	Org to Org/Blk	Open	0.5V+	Wht to Bl/Pur/Grn
150 - 175 OPTICAL	1992-2005	CD6AL	735-935	50-60	150V+	12V+	Brown to Brown/yellow	Org to Org/Blk	N/A	N/A	N/A
155 10 AMP	1984-1992	CD6	450-600	N/A	150V+	N/A	Brown to Brown/yellow	N/A	35-45	0.5V+	Wht to Bl/Pur/Grn
155 35 AMP	1984-1992	CD6	735-935	90-110	150V+	12V+	Brown to Brown/yellow	Org to Org/Blk	Open	0.5V+	Wht to Bl/Pur/Grn
155 Turbojet	1995	CD6	450-600	N/A	150V+	N/A	Brown to Brown/yellow	N/A	35-45	0.5V+	Wht to Bl/Pur/Grn
185	1990-1994	CD6	735-935	90-100 40-50*	150V+	12V+	Brown to Brown/yellow	Org to Org/Blk	Open	0.5V+	Wht to Bl/Pur/Grn
200 - 235	1979-1983	CD3/6	450-600	N/A	150V+	N/A	Brown to Brown/yellow	N/A	35-45	0.5V+	Wht to Bl/Pur/Grn
200 - 225	1986-1987	CD3/6	735-935	N/A	150V+	N/A	Brown to Brown/yellow	N/A	35-45	0.5V+	Wht to Bl/Pur/Grn
200 - 225	1988-2000	CD6	735-935	90-100 40-50*	150V+	12V+	Brown to Brown/yellow	Org to Org/Blk	Open	0.5V+	Wht to Bl/Pur/Grn
235	1984-1985	CD3/6	735-935	N/A	150V+	N/A	Brown to Brown/yellow	N/A	35-45	0.5V+	Wht to Bl/Pur/Grn
250	1991-2000	CD6	735-935	90-100 40-50*	150V+	12V+	Brown to Brown/yellow	Org to Org/Blk	Open	0.5V+	Wht to Bl/Pur/Grn
275	1985-1987	CD4/8	735-935	N/A	150V+	N/A	Brown to Brown/yellow	N/A	35-45	0.5V+	Wht to Bl/Pur/Grn
275	1988-1989	CD8	735-935	90-100 40-50*	150V+	12V+	Brown to Brown/yellow	Org to Org/Blk	Open	0.5V+	Wht to Bl/Pur/Grn
300	1985-1987	CD4/8	735-935	N/A	150V+	N/A	Brown to Brown/yellow	N/A	35-45	0.5V+	Wht to Bl/Pur/Grn
300	1988-1995	CD8	735-935	90-100 40-50*	150V+	12V+	Brown to Brown/yellow	Org to Org/Blk	Open	0.5V+	Wht to Bl/Pur/Grn

N/A = Not Applicable
*Part Manufactured by CDI Electronics
COMM = Commercial

Sec = Secondary
Pri = Primary

Org/Blk = Orange/Black Stripe
Blk = Black
Gnd = Ground

Pk = Pink
Pur = Purple
Bl = Blue

NOTE: Ignition Coils will read 0.2 to 1.0 ohms on the Primary and 200-400 ohms on the secondary windings

NOTICE: ALL DVA READINGS ARE TO BE TAKEN WITH ALL WIRING CONNECTED EXCEPT THE STOP CIRCUIT.

OMC Sea Drive

DVA (Peak Reading) Voltage and Resistance Chart

Engine	Year	Ignition	Stator						Trigger			Ignition Coil	
		Part	Charge Coil			Power Coil			Reading			Pri	Sec
		Number	Color	Ohms	DVA	Color	Ohms	DVA	Colors	Ohm	DVA	Ohm Reading	
2.5/2.6L 'S'	1982	582138 113-2138*	Brown to Brown/yellow	450-600	150V+	N/A	N/A	N/A	Wht to Bl/Pur/Grn	35-45	0.5V+	0.2-1.0	200-400
1.6L 'S'	1983	582125 113-2125	Brown to Brown/yellow	450-600	150V+	N/A	N/A	N/A	Wht to Bl/Grn	35-45	0.5V+	0.2-1.0	200-400
2.6L 10AMP 1AA/2BA/2B B	1983	582556 113-2556	Brown to Brown/yellow	450-600	150V+	N/A	N/A	N/A	Wht to Bl/Pur/Grn	35-45	0.5V+	0.2-1.0	200-400
2.5L 35AMP 1AA/2BA/2B B	1983	582138 113-2138	Brown to Brown/yellow	735-935	150V+	N/A	N/A	N/A	Wht to Bl/Pur/Grn	35-45	0.5V+	0.2-1.0	200-400
1.6L V4 'S'	1984	582125 113-2125	Brown to Brown/yellow	450-600	150V+	N/A	N/A	N/A	Wht to Bl/Grn	35-45	0.5V+	0.2-1.0	200-400
2.5/2.6L V6	1984	582556 113-2556	Brown to Brown/yellow	735-935	150V+	N/A	N/A	N/A	Wht to Bl/Pur/Grn	35-45	0.5V+	0.2-1.0	200-400
1.6L V4 'S'	1985	582811 113-2811	Brown to Brown/yellow	450-600	150V+	N/A	N/A	N/A	Wht to Bl/Grn	35-45	0.5V+	0.2-1.0	200-400
2.5/2.6L V6	1985	582651 113-2651	Brown to Brown/yellow	735-935	150V+	N/A	N/A	N/A	Wht to Bl/Pur/Grn	35-45	0.5V+	0.2-1.0	200-400
1.6L V4 'S'	1986	583110 113-3110	Brown to Brown/yellow	450-600	150V+	N/A	N/A	N/A	Wht to Bl/Grn	35-45	0.5V+	0.2-1.0	200-400
2.6L V6	1986	583114 113-3114	Brown to Brown/yellow	735-935	150V+	N/A	N/A	N/A	Wht to Bl/Pur/Grn	35-45	0.5V+	0.2-1.0	200-400
1.6L V4 'S'	1987	583110 113-3110	Brown to Brown/yellow	450-600	150V+	N/A	N/A	N/A	Wht to Bl/Grn	35-45	0.5V+	0.2-1.0	200-400
1.8L V4 'S'	1987	583101 113-3101	Brown to Brown/yellow	735-935	150V+	N/A	N/A	N/A	Wht to Bl/Pur/Grn/PK	35-45	0.5V+	0.2-1.0	200-400
2.7L V6	1987	583605 113-3605	Brown to Brown/yellow	735-935	150V+	N/A	N/A	N/A	Wht to Bl/Pur/Grn	35-45	0.5V+	0.2-1.0	200-400
3.6L V8	1987	583101 113-3101	Brown to Brown/yellow	735-935	150V+	N/A	N/A	N/A	Wht to Bl/Pur/Grn/PK	35-45	0.5V+	0.2-1.0	200-400
1.6L V4 'S'	1988	583101 113-3101	Brown to Brown/yellow	450-600	150V+	N/A	N/A	N/A	Wht to Bl/Pur/Grn/PK	35-45	0.5V+	0.2-1.0	200-400
2.0L V4 'S'	1988	584041 113-4041	Brown to Brown/yellow	735-935	150V+	Org to Org/Blk	90-110 40-55*	12V+	Wht to Bl/Pur/Grn/PK	35-45	0.5V+	0.2-1.0	200-400
3.0L V6 'S'	1988	584037 113-4037	Brown to Brown/yellow	735-935	150V+	Org to Org/Blk	90-110 40-55*	12V+	Wht to Bl/Pur/Grn	Open	0.5V+	0.2-1.0	200-400
1.6L V4 'S'	1989	583030 113-3030	Brown to Brown/yellow	450-600	150V+	N/A	N/A	N/A	Wht to Bl/Pur/Grn/PK	35-45	0.5V+	0.2-1.0	200-400
2.0L V4 'S'	1989	584041 113-4041	Brown to Brown/yellow	735-935	150V+	Org to Org/Blk	90-110 40-55*	12V+	Wht to Bl/Pur/Grn/PK	35-45	0.5V+	0.2-1.0	200-400
3.0L V6 'S'	1989	584037 113-4037	Brown to Brown/yellow	735-935	150V+	Org to Org/Blk	90-110 40-55*	12V+	Wht to Bl/Pur/Grn	Open	0.5V+	0.2-1.0	200-400
4.0L V8 'S'	1989	584035	Brown to Brown/yellow	735-935	150V+	Org to Org/Blk	90-110 40-55*	12V+	Wht to Bl/Pur/Grn/PK	Open	0.5V+	0.2-1.0	200-400
1.6L V4 'S'	1990	584028 113-4028	Brown to Brown/yellow	450-600	150V+	N/A	N/A	N/A	Wht to Bl/Pur/Grn/PK	35-45	0.5V+	0.2-1.0	200-400
2.0L V4 'S'	1990	584041 113-4041	Brown to Brown/yellow	735-935	150V+	Org to Org/Blk	90-110 40-55*	12V+	Wht to Bl/Pur/Grn/PK	35-45	0.5V+	0.2-1.0	200-400
3.0L V6 'S'	1990	584037 113-4037	Brown to Brown/yellow	735-935	150V+	Org to Org/Blk	90-110 40-55*	12V+	Wht to Bl/Pur/Grn	Open	0.5V+	0.2-1.0	200-400
4.0L V8 'S'	1990	584035	Brown to Brown/yellow	735-935	150V+	Org to Org/Blk	90-110 40-55*	12V+	Wht to Bl/Pur/Grn/PK	Open	0.5V+	0.2-1.0	200-400

N/A = Not Applicable
*Part Manufactured by CDI Electronics
COMM = Commerical
Pri = Primary
Sec = Secondary

Gnd = Ground
Bl = Blue
Blk = Black
Grn = Green
Org = Orange

Org/Blk = Orange/Black Stripe
Pk = Pink
Pur = Purple
Wht = White

Glossary of Terms

ADI – **Alternator Driven Ignition**, consists of a flywheel, stator, trigger and ignition module.

ADTC - **After Top Dead Center** Reference on ignition timing.

BTDC - **Before Top Dead Center** Reference on ignition timing.

CD Ignition – **Capacitive Discharge Ignition**. The capacitor stores the power developed by a stator or inverter and uses a SCR to deliver the power to the ignition coil.

CDM – **Capacitive Discharge Module**. The CDM is a combination of the switch box and ignition coil.

Crank - Refers to the engine being turned over with the starter, not running. Spark plug wires are usually connected to a spark gap tester.

DVA – **Direct Voltage Adapter**. Also known as Peak voltage. The term refers to the peak voltage as read by a specialized meter or a multimeter using a adapter to convert the peak voltage in the ignition system to a DC value. Regular meters cannot read the voltages due to the frequency and duration of the pulses in the system.

Power Pack – Term used by Johnson/Evinrude for the ignition module.

RPM – **Revolutions per minute**. The number of times the engine rotates in one minute.

S.L.O.W. – **Speed Limiting Oil Warning** system. Limits the RPM of the engine to approximately 2500 RPM in order to reduce the damage to the engine caused by a no oil or overheat condition.

Spark Tester - Device used to check for spark from the ignition coil to the spark plug. Testers are normally available in 1, 4, 6 and 8 cylinder configurations.

Switch Box – Term used for Force, Mariner and Mercury ignition modules.

W.O.T. – **Wide Open Throttle**.

CDI ELECTRONICS
OUTBOARD SERVICE BULLETIN

12/06/2003 **CDI Bulletin # 2276 Rev.1**

Models affected: Johnson/Evinrude 60 HP 1986 (CE) through 1994 (ER)
Johnson/Evinrude 65 HP 1987 (CU) through 1994 (ER)
Johnson/Evinrude 70 HP 1989 (CD) through 1994 (ER)

Problem:

The engine and electrical system can become damaged by overheating when air is trapped in the upper half of the cooling system. Trapped air can cause the upper cylinder or regulator/rectifier to overheat, resulting in damage to the piston or regulator (also damaging the stator). Air can become trapped when:

1. The engine is idling with a blocked or restricted thermostat bypass hole.
2. The engine is operated in aerated water, such as a pontoon or deck boat wakes.

SOLUTION:

Relocate the water pump indicator outlet tee (for the pee tube) from the side of the engine block to the top of the engine cylinder block. This allows air to be vented from the top of the cooling system and helps ensure an adequate water level when idling.

If the engine does not have a threaded hole located in the top of the cylinder block, please follow the steps below:

1. Remove the indicator hose from the outlet tee and discard.
2. Remove the outlet tee.
3. Install a 1/8th inch NPT brass or aluminum pipe plug into the hole where the tee was located (use gel-seal on the threads). (See fig. 1)
4. Measure 2 inches forward from the rear corner of the exhaust manifold cover (ref "A") and 1-3/8th inches from the exhaust cover gasket (Ref to "B"). Mark the intersection with a center punch. (See fig. 2).
5. Mark an 11/32nd (Letter "R") drill bit ½ inch from the tip (to prevent damage to the water jacket) as a depth gauge. Grease the tip and drill a hole through the casting. The grease will help prevent shavings from entering the cooling system.
6. Grease the tip of an 1/8th NPT tap and thread the hole.
7. Apply gel-seal to the threads of the original tee and install it in the hole you just tapped. Position the tee so that the indicator nipple is facing the back of the engine.
8. Install a new piece of 3/16th hose (19 inches long) from the tee to the indicator.

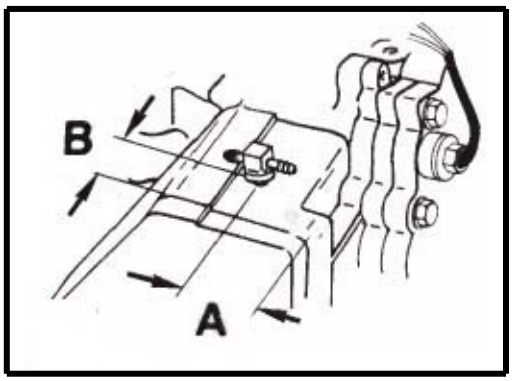

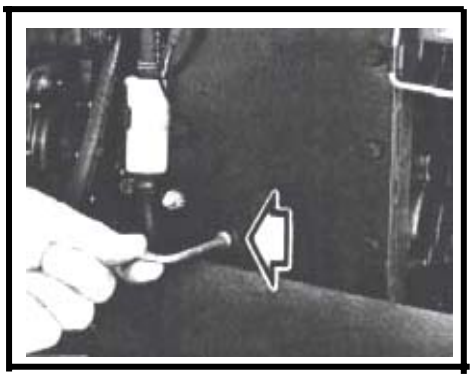

This drawing is to be used to determine if the flywheel sensor magnet has moved from it's original location only.

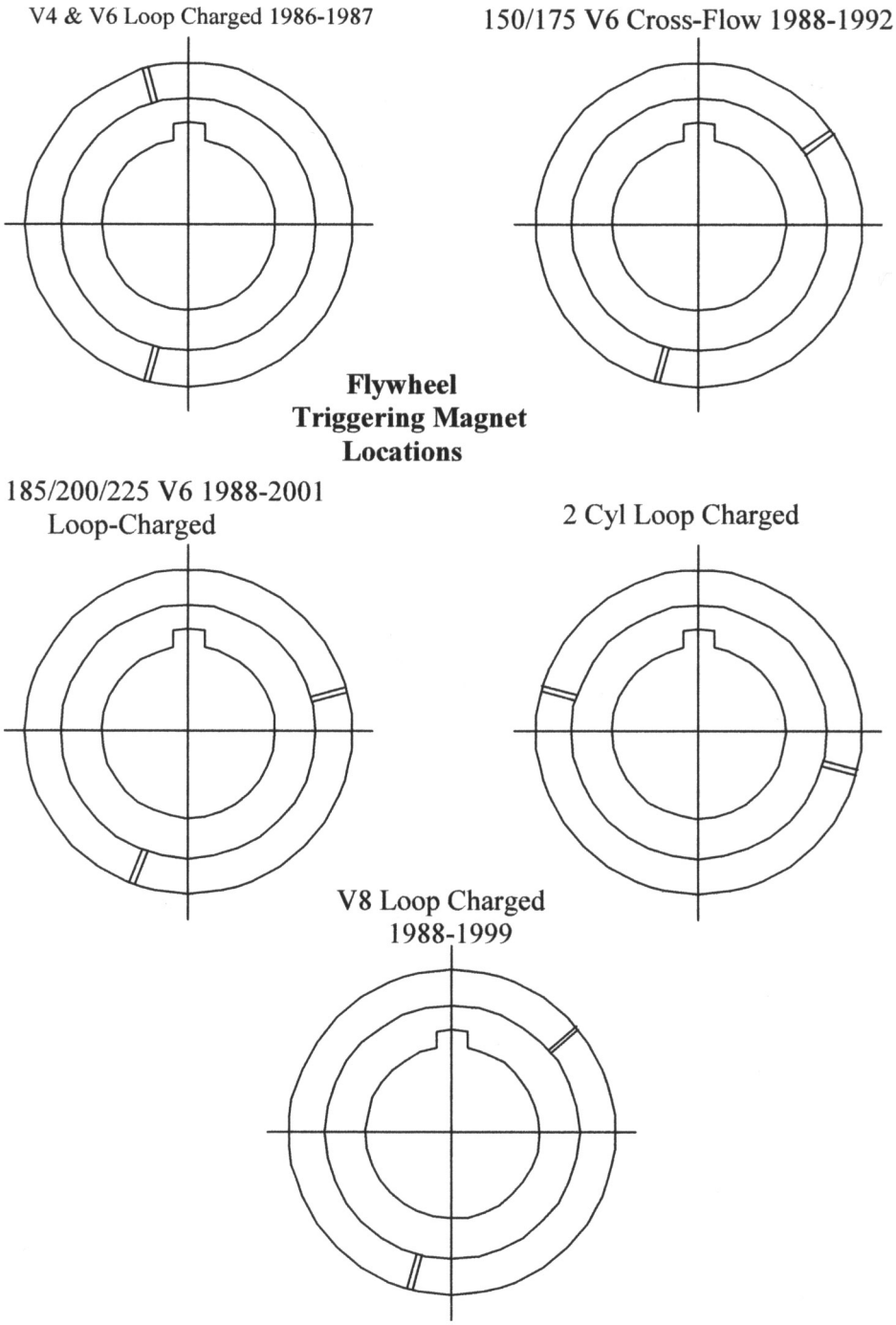

OMC Shift Assist (ESA) Applications					
OMC P/N	Ignition	CDI P/N	Superceded to	Application	Years
982749	Points	123-9898-P*		5.0, 5.7L V8	82 - 85
982755	Points	123-9898-P*		2.5, 3.0L V4	82 - 85
982774	Points	123-9898-P*		3.8, 4.3L V6	82 - 85
984036	Points	123-9898-P*	986342	4.3L V6	86 - 88
984276	Points	123-9898-P*	984730	5.0, 5.7L V8	86 - 88
984281	Points	123-9898-P*	985902	2.3, 2.5, 3.0L I4	86 - 88
984730	Points	123-9898-P*		3.5, 4.6, 5.0, 5.8L V8	89 -90
984730	Points	123-9898-P*		3.5, 4.6L V6, 7.5L V8	87 - 88
984740	Points	123-9898-P*		No data	
985902	Points	123-9898-P*	987740	2.3 3.0 I4, 2.6, 4.3L V6	89 - 90
986342	Points	123-9898-P*	987740	4.3L V6	86 - 88
986610	Delco EST	123-7878	987396	3.0, 3,0L HO I4	90
986837	Points	123-9898-P*		5.7L V8	90
987396	Delco EST	123-7878	987878	3.0, 3,0L HO I4	90 - ?
987564	Prestolite BID	123-7571		5.0, 5.8L V8	92 - 93
987566	Delco EST	123-7566		3.0, 3,0L HO I4	92 -93
987567	Prestolite BID	123-7567		4.3L V6	92 -93
987571	Prestolite BID	123-7571		5.7L V8	91 - 93
987738	Points	123-9898-P*		No data	
987739	Points	123-9898-P*		No data	
987740	Points	123-9898-P*		4.3L V6	86-91
987874	Delco EST	123-7566		3.0, 3,0L HO I4	
987878	Delco EST	123-7878		3.0, 3,0L HO I4	
* Also works with electronic points modules (Pertronix)					

Breaker Points Wiring

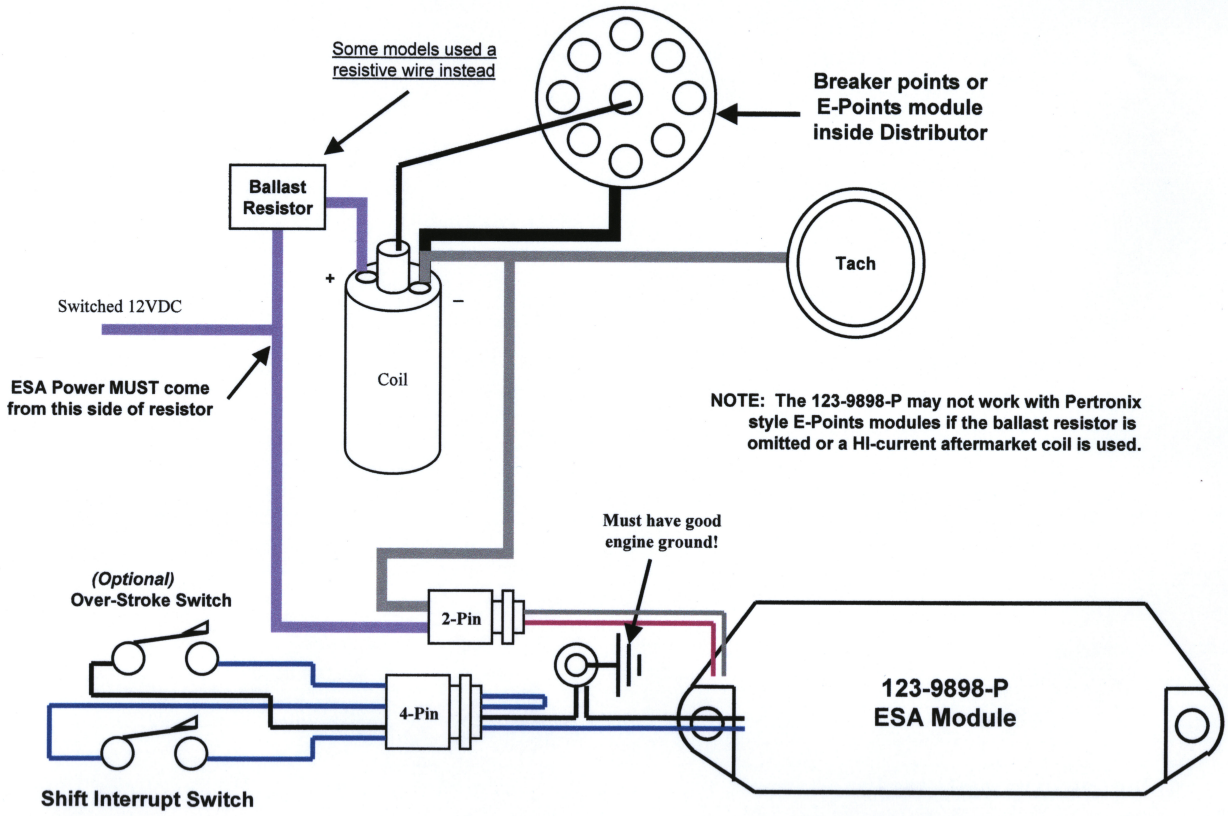

Prestolite BID Wiring

Breakerless Ignition Distributor

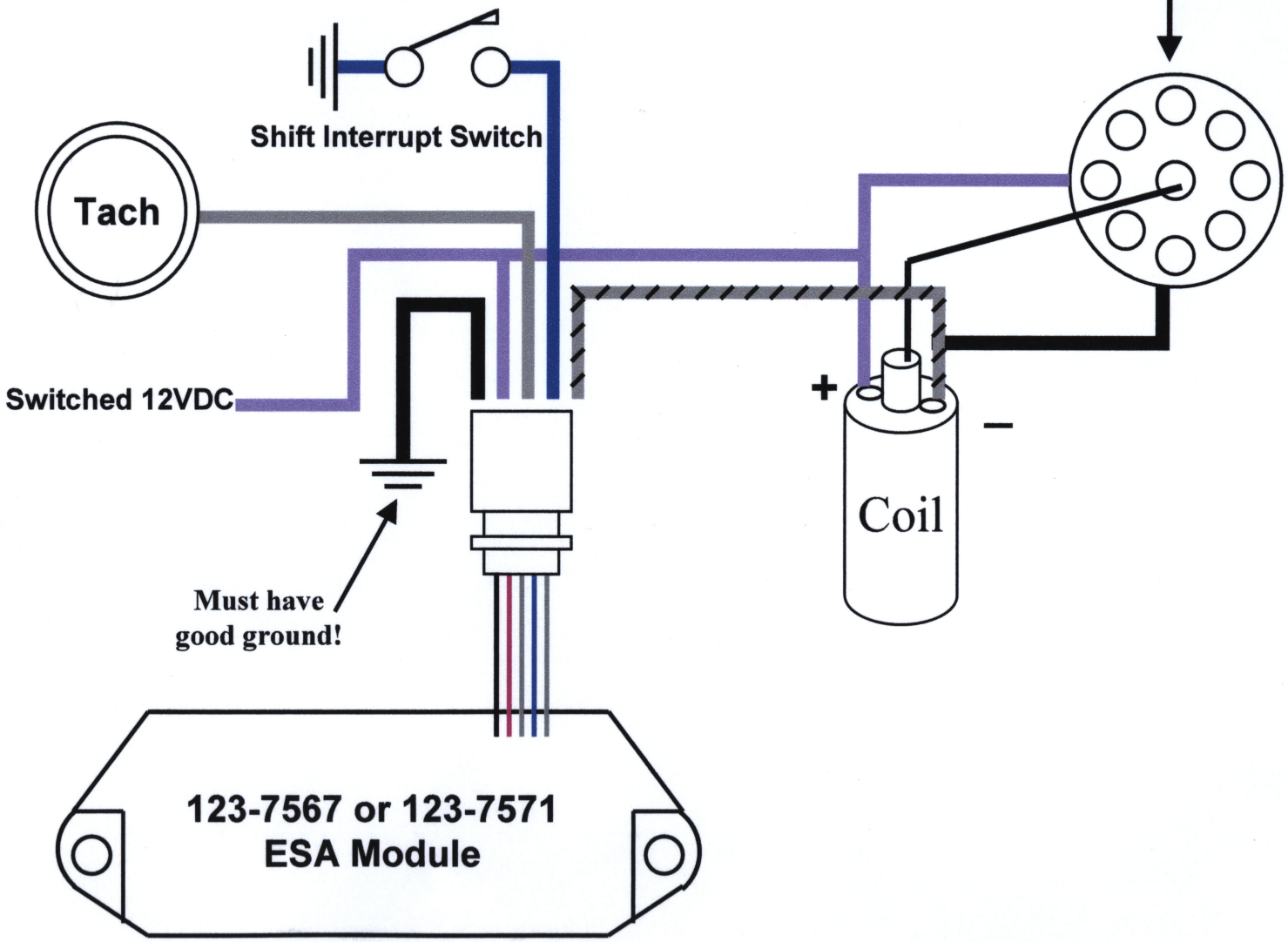

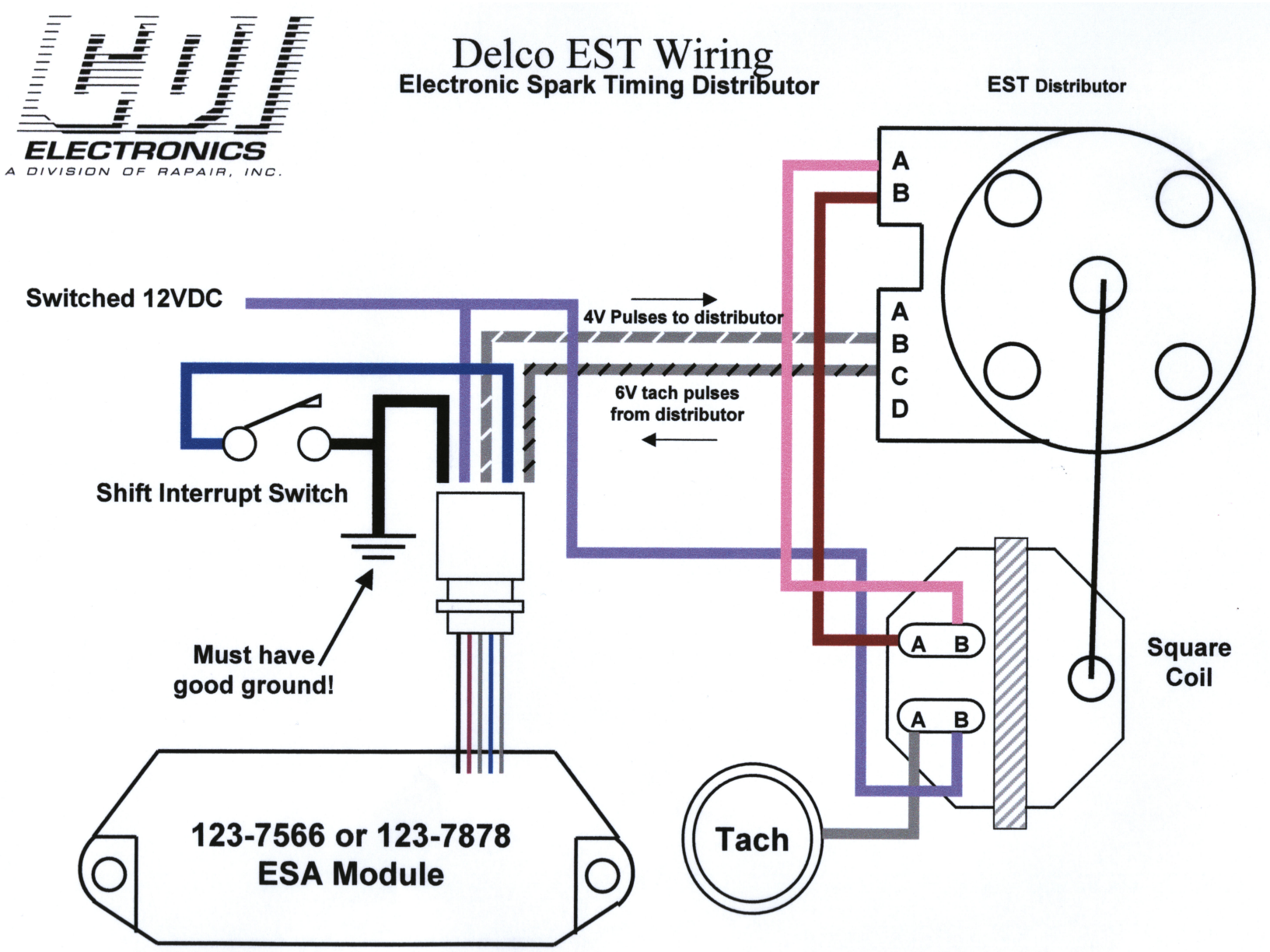
ELECTRONICS
A DIVISION OF RAPAIR, INC.
Delco EST Wiring
Electronic Spark Timing Distributor
EST Distributor
A
B
A
B
C
D
Switched 12VDC
4V Pulses to distributor
6V tach pulses
from distributor
Shift Interrupt Switch
Must have
good ground!
A B
A B
Square
Coil
Tach
123-7566 or 123-7878
ESA Module