BASIC POWER INDUSTRIES

GM EST Distributor Kit

Electronic Spark Timing (EST)

For Inboards & Stern drive applications

ebasicpower.com

Instructions

Part Number: BPIDELCOESTV8

It is recommended that you read this ENTIRE instruction manual to become familiar with the technical terms and to acquaint yourself with the procedures needed to complete this job correctly.

General Information

! Important

These instructions cover the general installation of the EST GM V8 Ignition System with Electronic Spark Timing (EST). They are intended for use by marine-certified technicians to provide the maximum benefits this ignition system offers. Trained technicians have the equipment, tools and knowledge to complete the installation safely and properly. Remember, these are general instructions and installation variations will occur based on the engine size and marine manufacturer of the engine.

CAUTION: The components in this kit comply with current U.S. Coast Guard regulations in effect. It is important that U.S. Coast Guard guidelines be observed when installing this kit to help prevent electrical sparks from igniting fuel vapors in the bilge during engine operation.

Kit Contents:

9366-3M	EST Distributor with dist./block gasket
4226M	Ignition Coil w/ "B" bracket
126A	"A" coil bracket
126EST	Spark plug Wire Set
Grease	Dielectric grease pack – 2 gram
22752HK	Harness kit – Includes 1 each of the following:
7241790	Harness, Distributor to Coil
22726	Harness, Power & Tachometer
98073	Harness, Timing
22747	Harness, Timing Plug
500492	Harness, Shift Interrupt (for Stern Drives)

Spark Management of the EST High Energy Ignition System

There are **THREE different** modes of operation of the EST Spark Management System. Please read to understand these process' before attempting installation.

1 - Starting & Running Mode
2 - Timing Mode
3 - Shift Interrupt Mode

They are explained below....

1) Starting & Running Mode:

During starting, the Ignition Control Module (ICM) allows spark to occur at the preset base timing position. This allows for easy engine starting. Once the engine starts the timing is controlled by the IC Module and the timing will advance via a built in timing advance circuit.

2) Base Timing Mode:

To set base timing, 12V DC is applied through the timing harness (98073), to the "B" terminal of the IC Module in the distributor. The "B" terminal is in the 4 terminal connector of the module. This locks-out the built in IC Module advance curve and prevents any ignition advance. The timing harness also has a looped wire that completes the circuit between IC Module terminals "C" & "D". This connection completes the signal from the pickup coil to the IC module. This allows ignition spark to continue, as the distributor is adjusted for base timing.

3) Shift Interrupt Mode - (Stern Drive Applications ONLY)

The shift interrupter harness (500429), is used to provide a means of ignition interruption, to allow the ease of shifting from gear engagement, into neutral. **This must be done when used in a stern drive applications with a shift interrupt.** Installation of this harness requires a 12 VDC signal to be wired through the existing shift interrupt circuit. Operation of this circuit is similar to the timing mode operation. When the shift interrupt switch is activated (circuit closed) the "B" IC Module terminal is energized and the ignition is interrupted. The difference is that the shift interrupt harness has no looped wire completing the circuit between IC Module terminals "C" & "D". Because this circuit is not completed, the engine ignition stops momentarily, allowing the stern drive unit to come out of gear. As the shift interrupt switch relaxes (circuit opened) the "B" terminal is de-energized allowing engine ignition to return to normal.

Setting Initial Base/Spark Timing

Please READ and UNDERSTAND before attempting

The following procedure is used to check and adjust ignition timing for the EST ignition system. In order to set the timing correctly, it **is necessary to lock out the automatic spark advance feature in the ignition module**. This is accomplished using the timing connectors # 22747 & 98073.

PLEASE CHECK THAT THE PURPLE WIRE FROM THE TIMING PLUG IS ACTUALLY RECEIVING 12 Volts WHEN THE KEY IS TURNED ON.

NOTE-1: **Normal engine running position is when..**

The **BLACK** wire on the harness #22747, is lined up with the **BROWN** wire on the timing harness #98073. This is the position the harness **MUST** be in, **BEFORE** starting the engine to start the timing process...AND Returned to this position AFTER setting initial base timing, as noted in #5 below.

NOTE-2: **Spark advance locked out / base timing position is when..**

The **PURPLE** wire on the harness #22747, is lined up with the **BROWN** wire on the timing harness #98073..

In this position the base timing can be checked and adjusted.

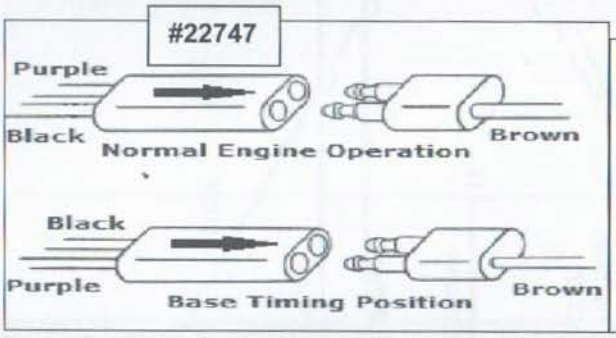

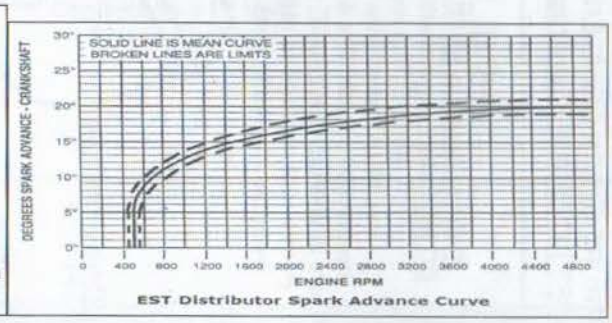

To Set Initial Base/Spark Timing:

1. Connect a timing light to the #1 spark plug lead.
2. With timing plug in "RUN" position (Black to Brown wire...see picture above), Start the engine and allow it to warm to operating temperature. Bring the engine to idle speed (650 to 800 rpm's).
3. Unplug and rotate the timing plug, harness #22747, to the "Base Timing Position" (Purple to Brown Wire...see picture above) as described in **NOTE-2** above.
4. Aim the timing light at the timing indicator. Adjust the timing by loosening the distributor hold down clamp and rotating the distributor to the proper mark. Tighten down the distributor hold down and recheck the timing. Repeat adjustment if timing has changed.
5. Stop the engine and switch the timing plug back to the "RUN" position. (Black to Brown wire...see picture above), as described in **NOTE-1** above.
6. Restart the engine and check total timing at 4000 rpm's. Compare this to the engine manufacturer's requirements for total advance. Make adjustment to the base timing by advancing or retarding to achieve total advance recommended by the engine manufacturer.

WIRING SET-UP INSTRUCTIONS - READ COMPLETELY BEFORE ATTEMPTING TO INSTALL

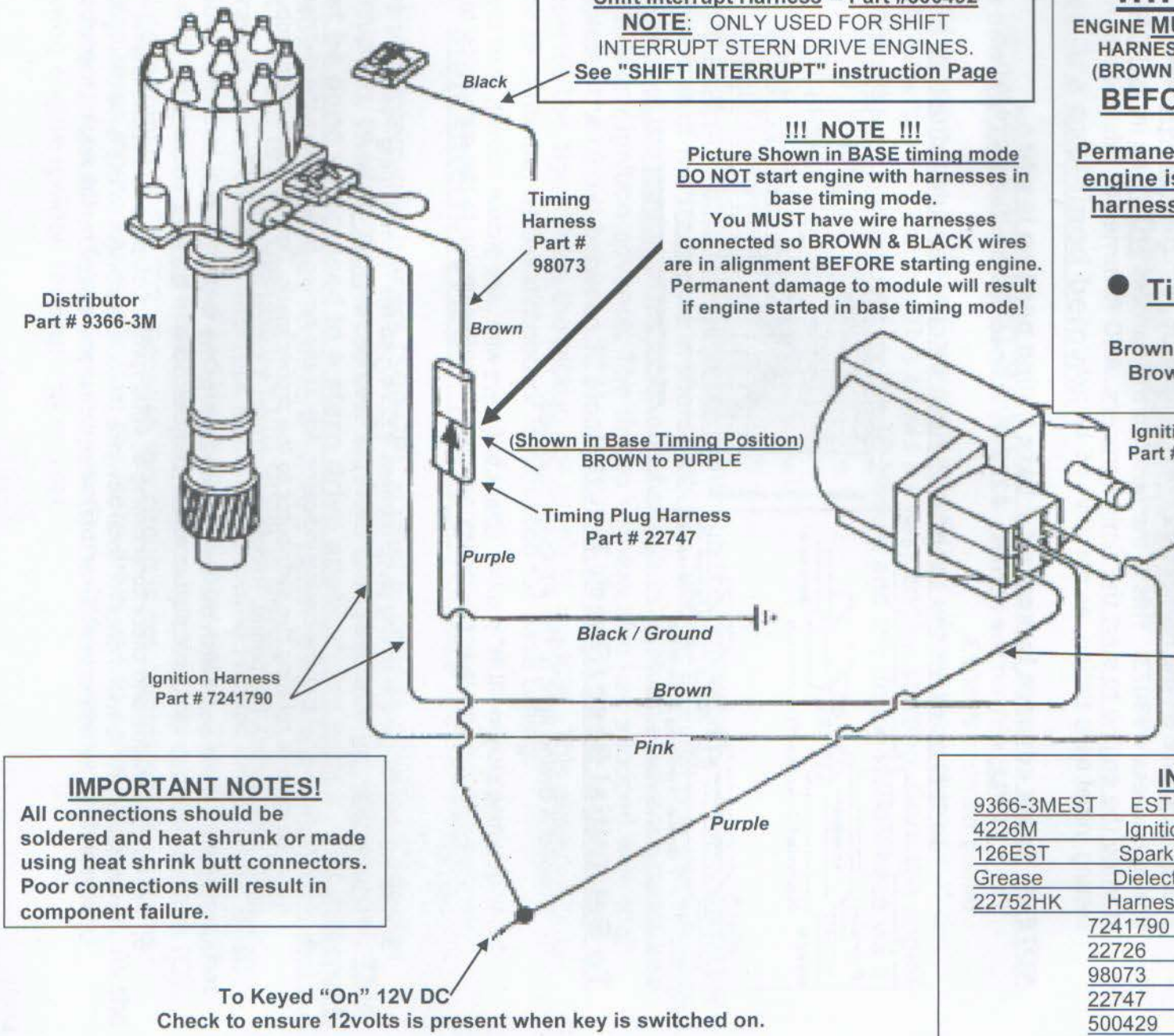

!!!! IMPORTANT !!!!

ENGINE **MUST BE RUNNING** AND TIMING PLUG HARNESS (22747) MUST BE CONNECTED with (BROWN WIRE AND BLACK WIRE CONNECTED) **BEFORE** SETTING BASE TIMING.

Permanent damage to module will result if engine is not running BEFORE switching harness from RUN mode to base timing mode !!!!

- **Timing Plug Connections:**

2 different settings.....

Brown to Black = Normal Engine Running
Brown to Purple = Base Timing Mode

IMPORTANT NOTES!

All connections should be soldered and heat shrunk or made using heat shrink butt connectors. Poor connections will result in component failure.

INVENTORY LIST

9366-3MEST	EST Distributor with distributor block gasket
4226M	Ignition Coil w/ "B" bracket
126EST	Spark plug Wire Set
Grease	Dielectric grease pack – 2 gram
22752HK	Harness kit – Includes 1 each of the following:
7241790	Distributor to Coil
22726	Power & Tachometer
98073	Timing Harness
22747	Timing Plug Harness
500429	Shift Interrupt (Stern Drive Applications)

SHIFT ASSIST WIRING DIAGRAMS

Mercruiser Stern drive

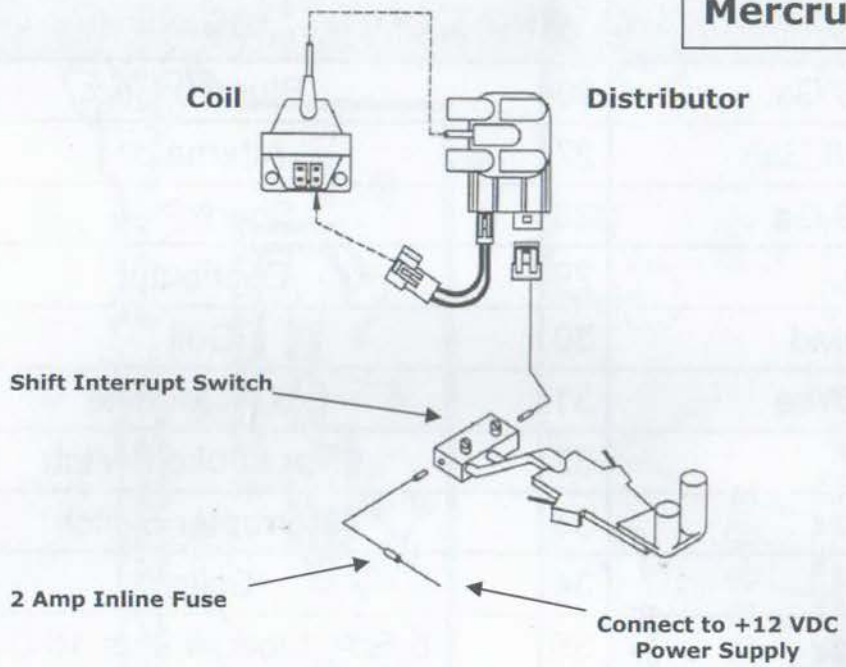

OMC - Cobra Engines with ESA Module (Electronic Shift Assist)

Installing a Delco EST distributor on a OMC Cobra engine, requires modifications to the existing engine wiring harness. The modifications provide for the proper operation of the shift interrupter circuit. On the following pages, Diagram #1 shows the original engine wiring and Diagram #2, shows the required engine harness modifications needed, when installing the Delco EST distributor.

Ignition Timing

Base engine timing with the Delco EST system is set by locking the distribtutor module in the base timing mode. This is accomplished by using the timing harness provided with this system. Supplying a +12V DC to the distributor module, locks the advance and allows base ignition timing to be set. Once the base timing is set, the timing harness is removed. The distributor's electronic module now controls the timing of the engine .

Shift Interrupt Circuit

The ignition interrupter circuit is designed to provided smooth shifting coming out of gear and reduce shifting effort on the control at the helm. With the original ignition system used on OMC Cobra engines, this is accomplished by lowering the engine RPM during shifting. The interrupter switch is engaged and triggers the ESA Module, which in turn pulses the ignition to ground. This lowering of the engine RPM allows the outdrive to easily shift out of gear. With the Delco EST System, the ESA Module is eliminated from the circuit and the shift interrupter switch is wired to the distributor with a harness provided. During shifting out of gear a +12V DC signal is supplied to the distributor module by the interrupt switch. This triggers the module to open the ignition circuit which momentarily lowers engine rpms and allows the shift to be complete.

OMC - OEM engine wiring legend

for CHART #1 & #2

3.0, 4.3, 5.7 (262/350 King Cobra) Models

1	Red / Purple 16 Ga.	26	Blue 10 Ga.
2	Green / White 16 Ga.	27	Alternator
3	Yellow / Red 12 Ga.	28	Spark Plug
4	Black 4 Ga.	29	Distributor
5	Spark Plug Lead	30	Coil
6	High Tension Wire	31	E.S.A. Module
7	Red 10 Ga.	32	Over stroke Switch
8	Black 10 Ga.	33	Interrupter Switch
9	Battery	34	Splice
10	Starter Motor	35	E.S.A. Module Blue 16 Ga.
11	Solenoid	36	Black 16 Ga.
12	Main Cable Connector	37	Blue 16 Ga.
13	10 Amp Circuit Breaker	38	Green 10 Ga.
14	Assist Solenoid	39	Purple 16 Ga.
15	Relay Control Box	40	Orange 10 Ga.
16	50 Amp Fuse	41	Gray 16 Ga.
17	Trim / Tilt Connector	42	Red / Purple 10 Ga.
18	Trim / Tilt Motor	43	Vacant
*19	Oil Pressure Sender - Audible Warning	44	Tan 16 Ga.
*20	Water Temperature Sender - Audible Warning	45	Light Blue 16 Ga.
21	Trim Sending Unit	46	Red 4 Ga.
22	Blue / White 16 Ga.	47	Brown / White 16 Ga.
23	Oil Sender - Gauge	48	Purple / Black 16 Ga.
24	Connector	49	Purple / ed Resistor Wire 20 Ga.
25	Water Temperature Sender - Gauge	50	Yellow / Red 16 Ga.

**** OMC King Cobra Models Only***

OMC COBRA - wiring diagram - CHART # 1

With **OE** (Original Equipment) distributor & ESA (Electronic Shift Assist) Module

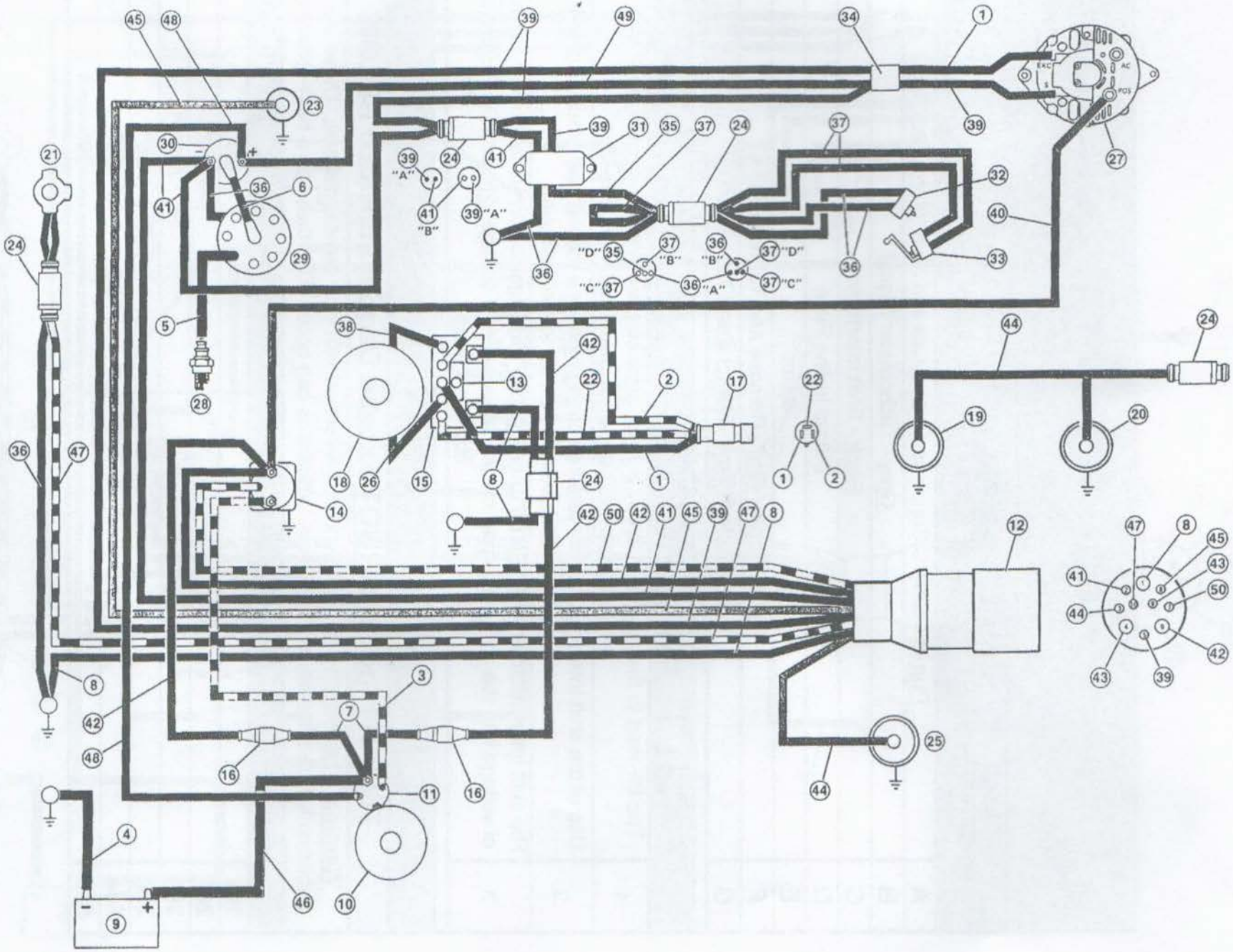

EST - Legend for Wiring changes.

Please reference chart #2

>>>> Please note these HARNESS CHANGES when installing this EST conversion kit <<<<

" A" thru "G" below are referenced on the following chart # 2

A	Purple - 12VDC Supply to Ignition Coil and Shift Interrupter Circuit
B	Grey - Tachometer Signal
C	Black - Shift Interrupter
D	2-Amp In-line Fuse
E	Splice
F	Purple / Red - Remove and Tape Back
G	Purple / Black - Remove and Tape Back

!!!!! <<< IMPORTANT >>> !!!!!

1	The B+ lead to the new ignition coil is ***NOT*** to be stepped down through a resistor or resistor wire. Follow the diagram to insure proper coil voltage.
2	Use of the shift interrupter circuit requires changing from a momentary grounding switch to one that supplies B+ voltage to the distributor.
3	The shift interrupter lead ***MUST*** be routed ***AWAY*** from ignition wires, to prevent the inductance of voltage into the shift interrupter circuit. Inductance of voltage ***WILL*** cause the engine to cut out or run rough.

!!!!! <<< CAUTION >>> !!!!!

Total Timing MUST NOT Exceed Degree Indicated BELOW

Warning: These timing Numbers should be verified with your owners manual. These are **NOT** necessarily true for every engine setup. Variances can occur. Use these as a base reference only.

C.I.D.	INITIAL Timing @ 500 RPM	TOTAL Timing @ 4000 RPM
181	0°	24°
262	2°	24°
305	8°	26°
350	8°	26°
454	12°	30°
502	12°	30°

OMC COBRA - wiring diagram - CHART # 2

With **DELCO E.S.T.** distributor & ESA (Electronic Shift Assist) Module

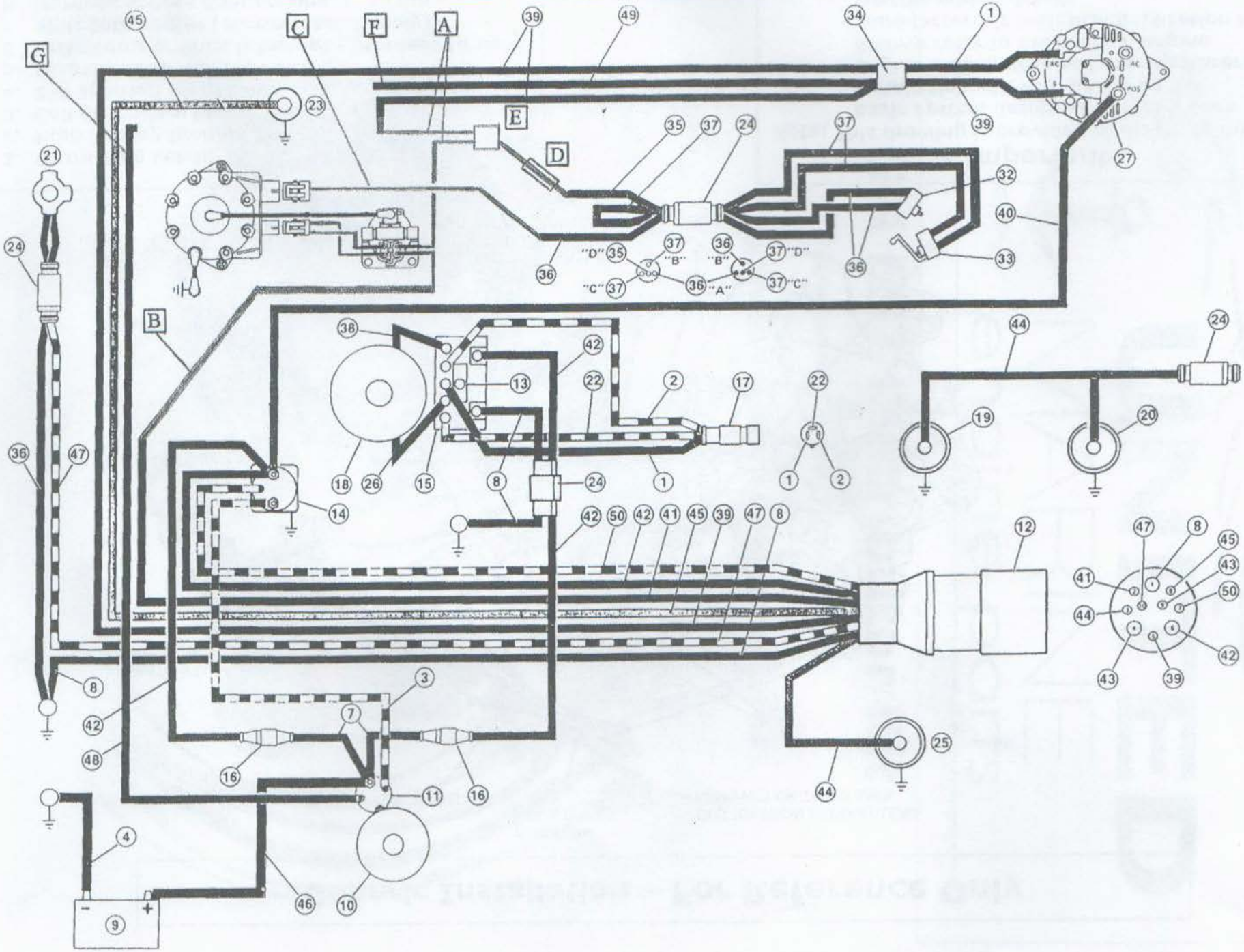

Generic Installation – For Reference Only

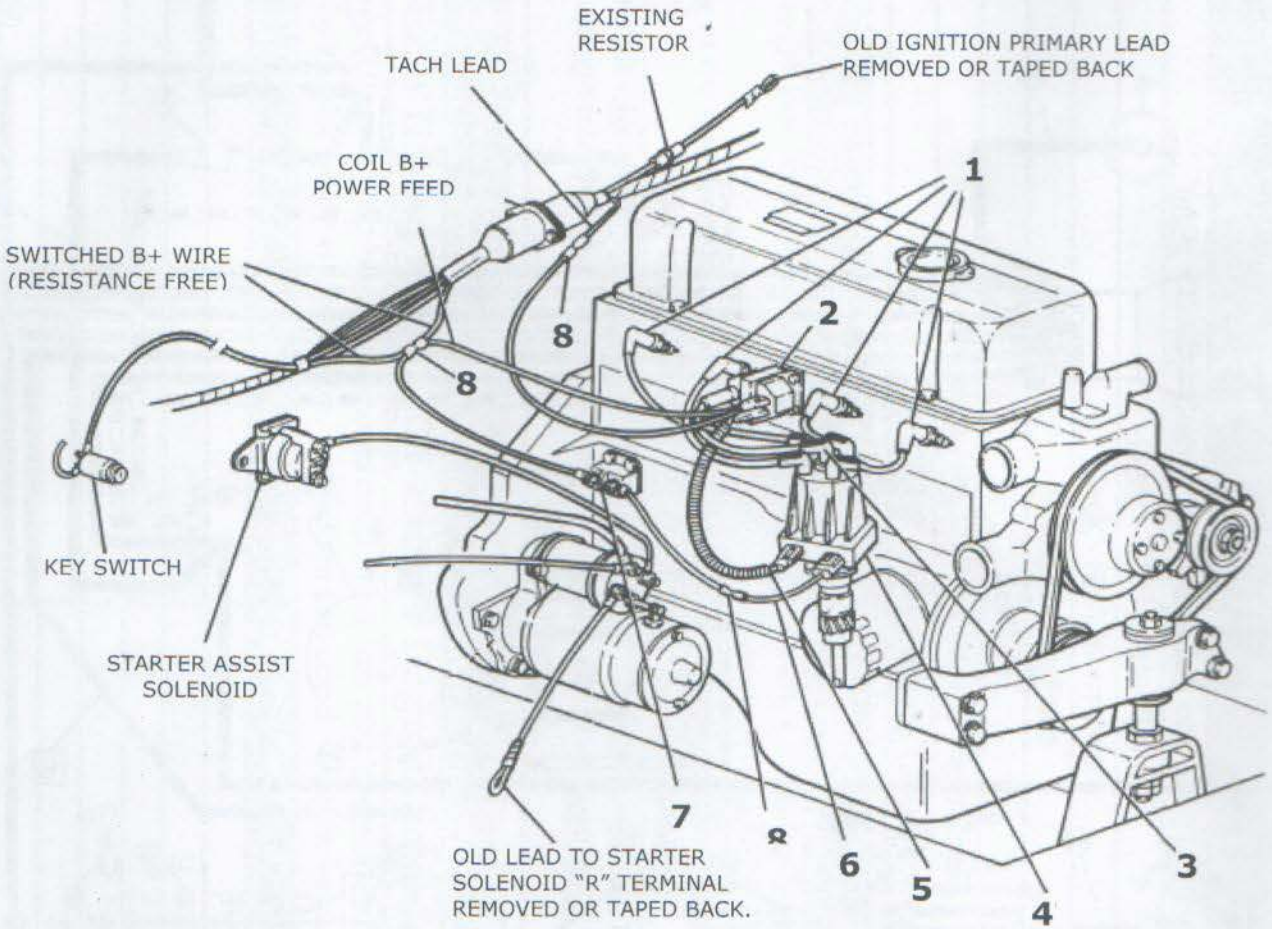

1. **Spark Plug Leads**
2. **High Energy Ignition Coil**
3. **Coil Secondary Lead**
4. **EST Ignition Distributor**
5. **Distributor to Coil Harness**
6. **Distributor to Shift Interrupter Harness (if used)**
7. **Shift Interrupter (representative only)**
8. **Harness Splices Connections**

! Important

Note: This drawing is provided to illustrate the basic system design and layout. Each installation will vary based on the engine model, year and manufacturer. Always refer to the original engine manufacturer's technical publication for specific wiring details.